MINI UPROAR™

TOWER HOBBIES®

INSTRUCTION MANUAL

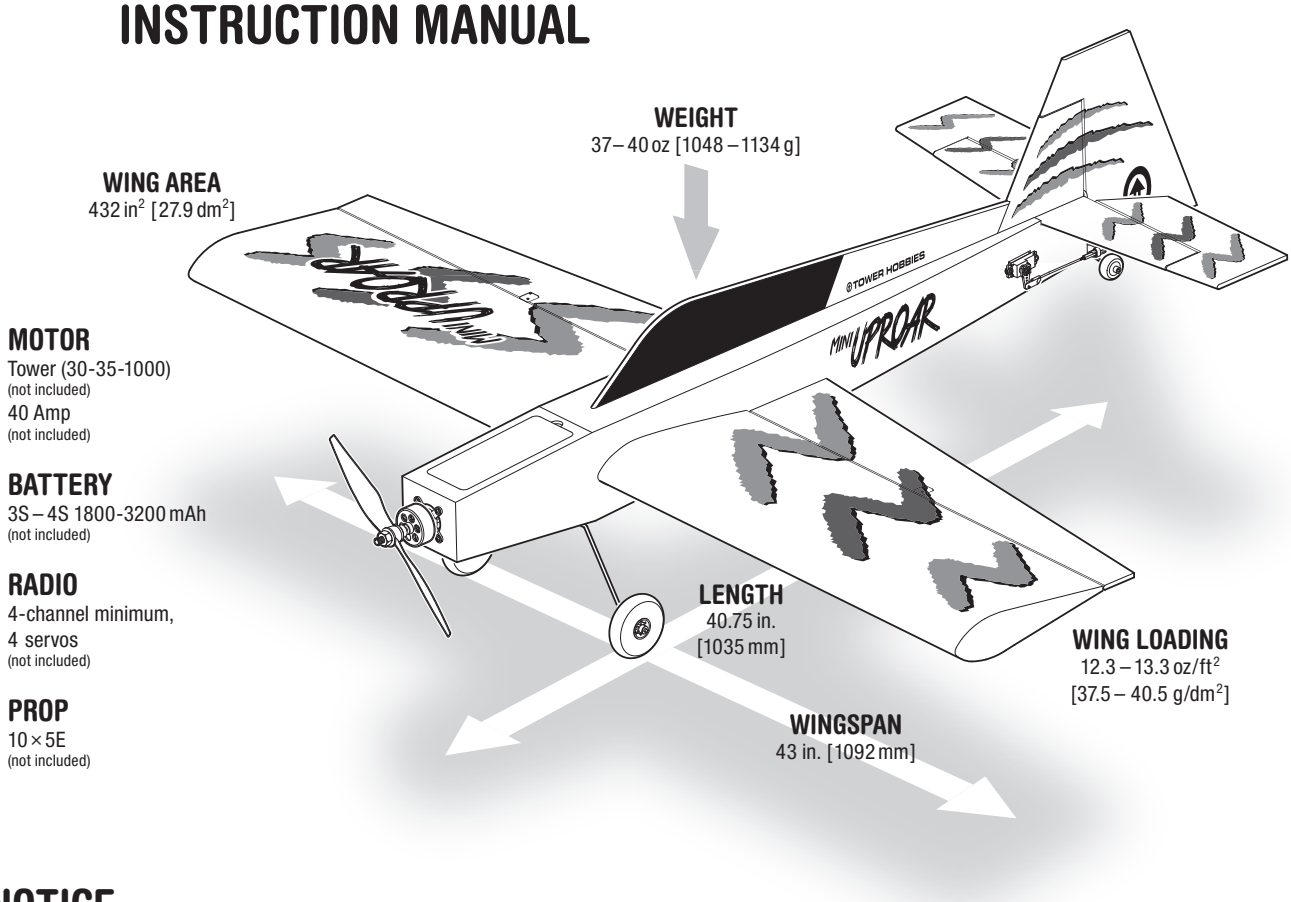

NOTICE

All instructions, warranties and other collateral documents are subject to change at the sole discretion of Horizon Hobby, LLC. For up-to-date product literature, visit www.horizonhobby.com and click on the support tab for this product.

MEANING OF SPECIAL LANGUAGE

The following terms are used throughout the product literature to indicate various levels of potential harm when operating this product:

WARNING: Procedures, which if not properly followed, create the probability of property damage, collateral damage, and serious injury OR create a high probability of superficial injury.

CAUTION: Procedures, which if not properly followed, create the probability of physical property damage AND a possibility of serious injury.

NOTICE: Procedures, which if not properly followed, create a possibility of physical property damage AND little or no possibility of injury.

⚠ **WARNING:** Read the ENTIRE instruction manual to become familiar with the features of the product before operating. Failure to operate the product correctly can result in damage to the product, personal property and cause serious injury.

This is a sophisticated hobby product. It must be operated with caution and common sense and requires some basic mechanical ability. Failure to operate this Product in a safe and responsible manner could result in injury or damage to the product or other property. This product is not intended for use by children without direct adult supervision. Do not use with incompatible components or alter this product in any way outside of the instructions provided by Horizon Hobby, LLC. This manual contains instructions for safety, operation and maintenance. It is essential to read and follow all the instructions and warnings in the manual, prior to assembly, setup or use, in order to operate correctly and avoid damage or serious injury.

14+ **AGE RECOMMENDATION: Not for children under 14 years. This is not a toy.**

READ THROUGH THIS MANUAL BEFORE STARTING CONSTRUCTION.

It contains important instructions and warnings concerning the assembly and use of this model.

⚠ **WARNING: This product may use a lithium polymer (LiPo) battery. Improper handling may result in FIRE! You are responsible for following all safety precautions as outlined in this instruction manual.**

58755 TOWA2041

A TABLE OF CONTENTS

AS A NEW OWNER 2
AMA 2
SAFETY PRECAUTIONS 3
ELECTRIC MOTOR SAFETY PRECAUTIONS 4
LITHIUM BATTERY WARNING 5
REQUIRED ITEMS 6
Radio Components 6
Electric Power 6
Adhesives and Building Supplies 6
Optional Supplies and Tools 6
ORDERING REPLACEMENT PARTS 6
CONTENTS 7
PREPARATION 8
WING ASSEMBLY 8
FUSELAGE ASSEMBLY 13
Install the Tail Surfaces 13
Main Landing Gear Installation 14
Tail Surface Installation 15
Install the Elevator and Rudder Servos 17
FINAL ASSEMBLY 19
APPLY THE DECALS 22
GET THE MODEL READY TO FLY 22
Check the Control Directions 22
Set the Control Throws 23
Install the Propeller and Spinner 24
Balance the Model Laterally 24
Balance the Model C.G. 25
PREFLIGHT 26
FLYING 26
LIMITED WARRANTY 28

B AS A NEW OWNER . . .

As a new owner of an unmanned aircraft system (UAS), you are responsible for the operation of this vehicle and the safety of those around you. Please contact your local authorities to find out the latest rules and regulations.

In the United States, please visit:

KNOW BEFORE YOU FLY

knowbeforeyoufly.org

AMA

We urge you to join the AMA (Academy of Model Aeronautics) and a local R/C club. The AMA is the governing body of model aviation and membership is required to fly at AMA clubs. Though joining the AMA provides many benefits, one of the primary reasons to join is liability protection. Coverage is not limited to flying at contests or on the club field. It even applies to flying at public demonstrations and air shows. Failure to comply with the Safety Code may endanger insurance coverage. Additionally, training programs and instructors are available at AMA club sites to help you get started the right way. There are over 2,500 AMA chartered clubs across the country. Contact the AMA at the address or toll-free phone number below.

Academy of Model Aeronautics
5151 East Memorial Drive
Muncie, IN 47302-9252

Ph. (800) 435-9262
Fax (765) 741-0057

AMA SINCE 1936

Or via the Internet at: www.modelaircraft.org

IMPORTANT: Two of the most important things you can do to preserve the radio controlled aircraft hobby are to avoid flying near full-scale aircraft and avoid flying near or over groups of people.

When You See This Symbol . . .

Use CA glue.

Use 6 minute epoxy.

Use the drill size specified.

Use CA glue to harden the holes.

Use threadlocker compound.

Use 30 minute epoxy.

Use a blade for trimming.

Use light oil.

C SAFETY PRECAUTIONS

Protect Your Model, Yourself & Others…
Follow These Important Safety Precautions

1. Your model airplane should not be considered a toy, but rather a sophisticated, working model that functions very much like a full-size airplane. Because of its performance capabilities, this model, if not assembled and operated correctly, could possibly cause injury to yourself or spectators and damage to property.
2. You must assemble the model according to the instructions. Do not alter or modify the model, as doing so may result in an unsafe or unflyable model. In a few cases the instructions may differ slightly from the photos. In those instances the written instructions should be considered as correct.
3. You must take time to **build straight, true and strong**.
4. You must use an R/C radio system that is in first-class condition.
5. You must correctly install all R/C and other components so that the model operates correctly on the ground and in the air.
6. You must check the operation of the model before every flight to ensure that all equipment is operating and that the model has remained structurally sound. Be sure to check clevises or other connectors often and replace them if they show any signs of wear or fatigue.
7. If you are not an experienced pilot or have not flown this type of model before, we recommend that you get the assistance of an experienced pilot in your R/C club for your first flights. If you're not a member of a club, your local hobby shop has information about clubs in your area whose membership includes experienced pilots.
8. **IMPORTANT:** While this ARF has been flight tested to exceed normal use with the recommended power system components, the structure of the plane was purposely designed to be lightweight. This results in a plane that is not as durable as most models. Also, be careful when handling the plane. **We recommend that you do not fly at full throttle and apply full 3D throws.** This plane will perform excellent 3D maneuvers flying slowly.

We, as the ARF manufacturer, provide you with a top quality, thoroughly tested plane and instructions. But, ultimately the quality and flyability of your finished model depends on how you build it. Therefore, we cannot in any way guarantee the performance of your completed model, and no representations are expressed or implied as to the performance or safety of your completed model.

REMEMBER: Take your time and follow the instructions to end up with a well-built model that is straight and true.

As the user of this product, you are solely responsible for operating in a manner that does not endanger yourself and others or result in damage to the product or the property of others.

- Always keep a safe distance in all directions around your model to avoid collisions or injury. This model is controlled by a radio signal subject to interference from many sources outside your control. Interference can cause momentary loss of control.
- Always operate your model in open spaces away from full-size vehicles, traffic and people.
- Always carefully follow the directions and warnings for this and any optional support equipment (chargers, rechargeable battery packs, etc.).
- Always keep all chemicals, small parts and anything electrical out of the reach of children.
- Always avoid water exposure to all equipment not specifically designed and protected for this purpose. Moisture causes damage to electronics.
- Never place any portion of the model in your mouth as it could cause serious injury or even death.
- Never operate your model with low transmitter batteries.
- Always keep aircraft in sight and under control.
- Always use fully charged batteries.
- Always keep transmitter powered on while aircraft is powered.
- Always remove batteries before disassembly.
- Always keep moving parts clean.
- Always keep parts dry.
- Always let parts cool after use before touching.
- Always remove batteries after use.
- Always ensure failsafe is properly set before flying.
- Never operate aircraft with damaged wiring.
- Never touch moving parts.

D ELECTRIC MOTOR SAFETY PRECAUTIONS

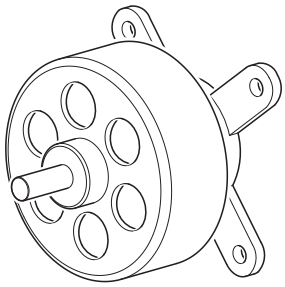

⚠ **WARNING:** A spinning propeller has the potential to cause serious and permanent injury to yourself and others.

⚠ **WARNING:** Once the motor batteries are connected, the propeller can start spinning at any time. Make sure the fail safe is set on your radio to prevent the motor from starting if the transmitter signal is lost.

⚠ **WARNING:** Stand clear of the propeller when handling the aircraft. Make sure the aircraft is held securely until the battery has been disconnected.

ALWAYS

- **ALWAYS** remove the propeller if the motor batteries will be connected while working on your plane.
- **ALWAYS** switch on the transmitter first with the throttle stick in the lowest position, then plug in the lipo battery, then turn on the receiver.
- **ALWAYS** unplug the motor batteries first before switching off the receiver then transmitter.
- **ALWAYS** keep your face and body as well as all spectators away from the plane of rotation of the propeller as you run the motor.
- **ALWAYS** keep these items away from the prop: loose clothing, shirt sleeves, ties, scarfs, long hair or loose objects such as pencils or screwdrivers that may fall out of shirt or jacket pockets into the prop.

NEVER

- **NEVER** operate the motor in an area of loose gravel or sand; the propeller may throw such material in your face or eyes.
- **NEVER** touch the motor during or right after operation. The motor gets HOT!
- **NEVER** switch off the transmitter with the motor batteries plugged in.
- **NEVER** reach through the arc of the propeller when plugging the battery into the ESC.

E LITHIUM BATTERY WARNING

This product uses a lithium polymer (LiPo) battery. Improper handling could result in FIRE! A lithium battery fire has the potential to ignite surrounding areas and may cause property damage or cause personal injury. For safe LiPo handling, follow all of these guidelines:

MOST IMPORTANT! Never leave the battery or charger unattended during charging or discharging.

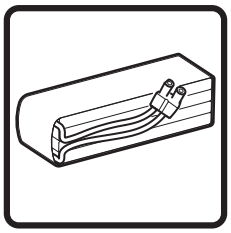

WARNING: Read the entire instruction sheet included with your motor batteries. Failure to follow the instructions could cause permanent damage to the battery and its surroundings and cause bodily harm!

ALWAYS

- **ALWAYS** remove the motor batteries from the plane when charging.
- **ALWAYS** follow the charging instructions included with your charger for charging LiPo batteries. LiPo batteries can cause serious damage or fire if misused.
- **ALWAYS** use a LiPo-approved charger.
- **ALWAYS** set the charger's output volts to match the battery volts.
- **ALWAYS** charge a LiPo battery in a fireproof location away from combustible materials.
- **ALWAYS** balance charge the battery.
- **ALWAYS** store and transport LiPo batteries in a fireproof container away from combustible materials.
- **ALWAYS** KEEP OUT OF THE REACH OF CHILDREN.
- **ALWAYS** keep LiPo batteries out of the reach of animals. A punctured battery may cause a fire.
- **ALWAYS** disconnect the battery and unplug the charger after the charge is complete.
- **ALWAYS** keep a supply of sand accessible when charging a LiPo battery. Dumping sand on the battery will assist in extinguishing a LiPo chemical fire.
- **ALWAYS** remove the batteries from the plane after a crash. Set them aside in a safe location for at least 20 minutes. If the batteries are damaged in the crash, they could catch fire. If the battery starts to swell, quickly move the battery to a safe location, preferably outside away from combustible material. Place it in a bucket, covering the battery with sand.

NEVER

- **NEVER** use water to try and put out a LiPo fire.
- **NEVER** charge or use a battery that is deformed, bent, crushed, swollen, or has any type of visible damage.
- **NEVER** use a NiCd/NiMH peak charger to charge a LiPo battery.
- **NEVER** charge in excess of 4.20V per cell unless the battery is rated for a higher voltage.
- **NEVER** charge at currents greater than 1C unless the battery is rated for a higher charge rate.
- **NEVER** trickle-charge a LiPo battery.
- **NEVER** allow the battery temperature to exceed 140 degrees F (60 degrees C).
- **NEVER** disassemble or modify the pack wiring in any way or puncture the cells, as this may result in a fire.
- **NEVER** discharge below 3.0V per cell.
- **NEVER** charge the battery or set the charger on combustible materials.
- **NEVER** charge the battery inside a vehicle or in a location that could be damaged in the event of a LiPo fire.
- **NEVER** put a LiPo battery in the pocket of any clothing.
- **NEVER** charge the batteries in the plane. Disconnect the batteries and remove them from the plane immediately after landing.
- **NEVER** allow the battery to short circuit by touching exposed wires together. This may cause a fire.
- **NEVER** operate or store batteries below 40˚F or above 110˚F (4-43˚C)

F REQUIRED ITEMS

Refer to the separate sheet for a list of the recommended items.

Radio Components

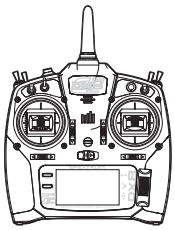

- ☐ 4-Channel Transmitter minimum

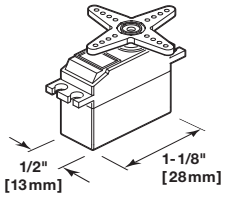

- ☐ Four micro servos with 39+ oz-in (2.8 kg-cm) torque

- ☐ Two 6"– 9" [152—229mm] servo extensions

  Two 16" [406mm] servo extensions

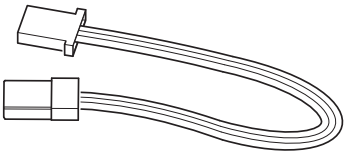

Electric Power

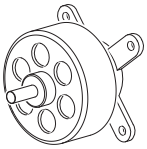

- ☐ (30-35-1000) BL Motor

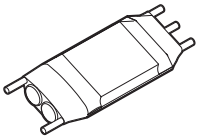

- ☐ 40 Amp Brushless ESC

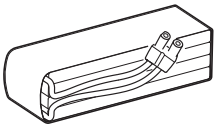

- ☐ 3S-4S 1800-3200mAh LiPo Battery

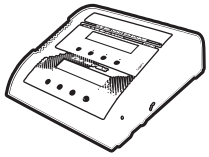

- ☐ 3S-4S Balancing Charger

- ☐ Propeller 10x5E

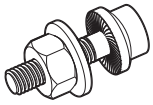

- ☐ 4mm Collet Prop Adapter

Adhesives and Building Supplies

- ☐ Tower Hobbies 6-minute Epoxy (TOWR3806)
- ☐ Tower Hobbies 30-minute Epoxy (TOWR3810)
- ☐ Mixing Sticks (50, GPMR8055)
- ☐ Mixing Cups (GPMR8056)
- ☐ Epoxy Brushes
- ☐ Tower Hobbies Build-It CA Thin Glue (TOWR3800)
- ☐ Denatured Alcohol (for epoxy clean-up)
- ☐ Masking Tape
- ☐ 1/16" (1.5mm), 5/64" (2mm) drill bits
- ☐ Drill
- ☐ Phillips head screwdriver
- ☐ Wire Cutters
- ☐ Pliers
- ☐ Medium T-pins (HCAR5150)
- ☐ CG Machine (GPMR2400)
- ☐ Paper Towels
- ☐ Stick-On Segmented Lead Weights (GPMQ4485)
- ☐ #1 Hobby Knife (RMXR6903)
- ☐ #11 Blades (5-pack, RMXR6930)

Covering Tools

- ☐ Top Flite MonoKote Heat Gun (TOPR2000)
- ☐ Coverite 21st Century Sealing Iron (COVR2700)
- ☐ Coverite 21st Century Cover Sock (COVR2702)
- ☐ Coverite 21st Century Trim Sealing Iron (COVR2750)

Optional Supplies and Tools

Here is a list of optional tools that will help you build the model.

- ☐ CA Applicator Tips (HCAR3780)
- ☐ CA Debonder (GPMR6039)
- ☐ Robart Super Stand II (ROBP1402)
- ☐ Servo Horn Drill (HCAR0698)
- ☐ Precision Magnetic Prop Balancer (TOPQ5700)

G ORDERING REPLACEMENT PARTS

Replacement parts are available from Tower Hobbies for your Tower Hobbies Mini Uproar model airplane. Our order assistance representatives are ready to answer your questions or to place your order. Call us at (800) 637-6050.

If any parts are missing or damaged, consult Tower Hobbies Order Assistance.

Toll Free Order Assistance: 800 637-6050

REPLACEMENT PARTS

TOWA4120	Wing
TOWA4121	Fuselage
TOWA4122	Tail Surfaces
TOWA4123	Landing Gear
TOWA4124	Tail Gear
TOWA4125	Hatch
TOWA4126	Decals

H CONTENTS

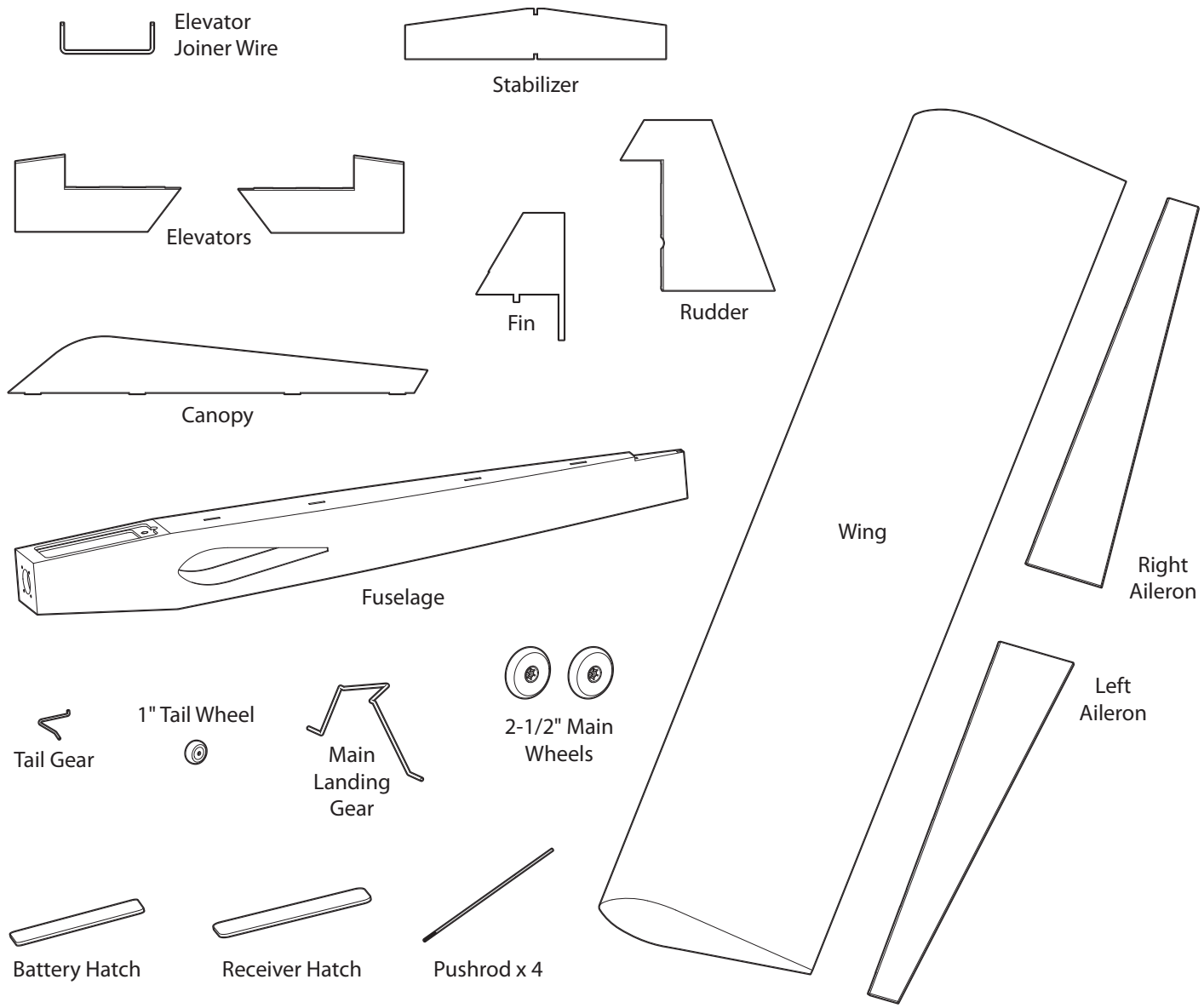

PARTS NOT SHOWN

(4) Nylon clevises

(4) Silicone clevis keepers

(4) Nylon control horns

(4) Landing gear straps

(4) Faslinks

(17) CA hinges

(4) 3 mm wheel collars

(1) 2 mm wheel collar

(5) 3 x 3 mm set screws

(8) 2 x 10 mm washer head sheet metal screws

(8) 2 x 10 mm machine screws

(4) 3 x 10 mm machine screws

(4) 3 mm flat washers

200 mm self-adhesive hook and loop material

200 mm hook and loop strap material

1 PREPARATION

Use a covering iron set to low heat with a covering sock to go over the model, slowly and carefully tightening the covering where necessary. **Do Not** use excessive heat or the covering may cause the parts to twist.

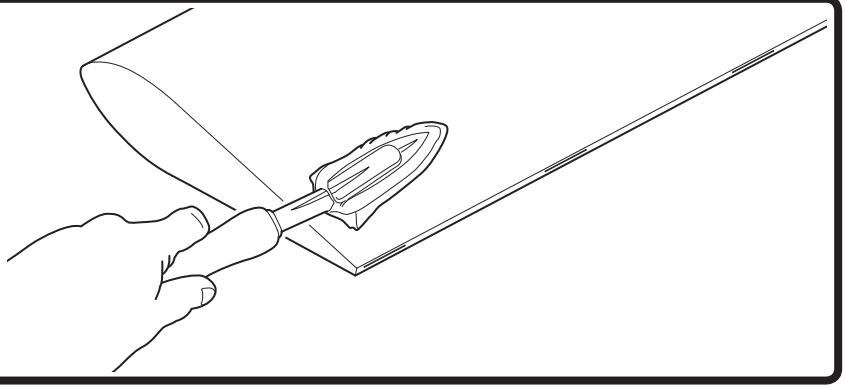

2 WING ASSEMBLY

Center the wing in the fuselage.

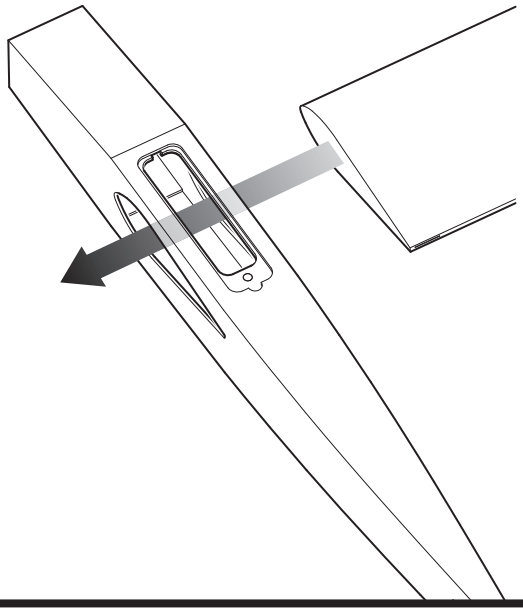

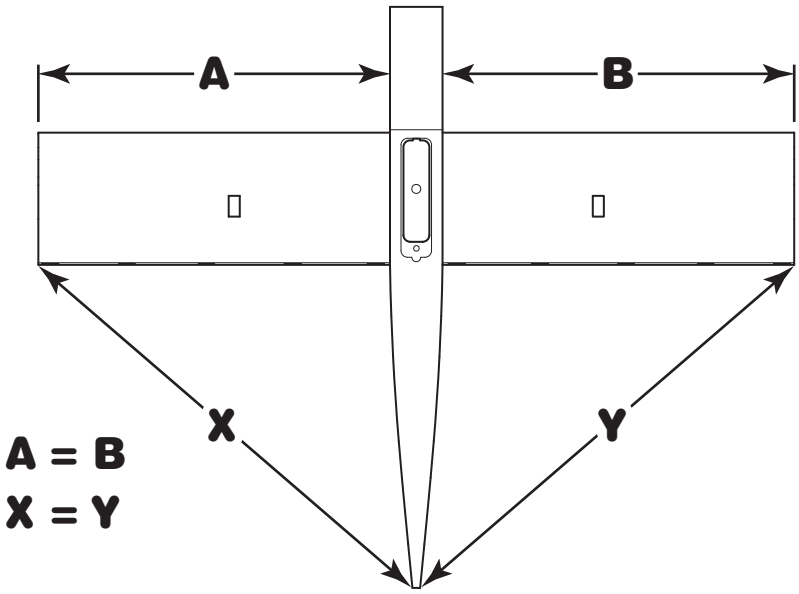

3

Mark the outline of the fuselage on both sides of the wing.

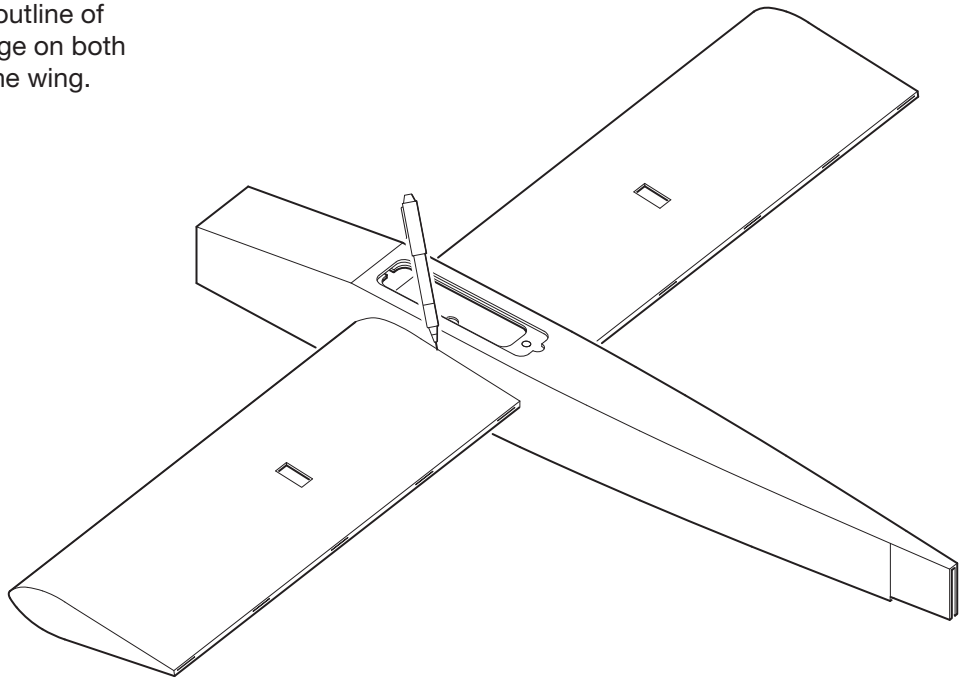

4

Trim the covering from the wing.

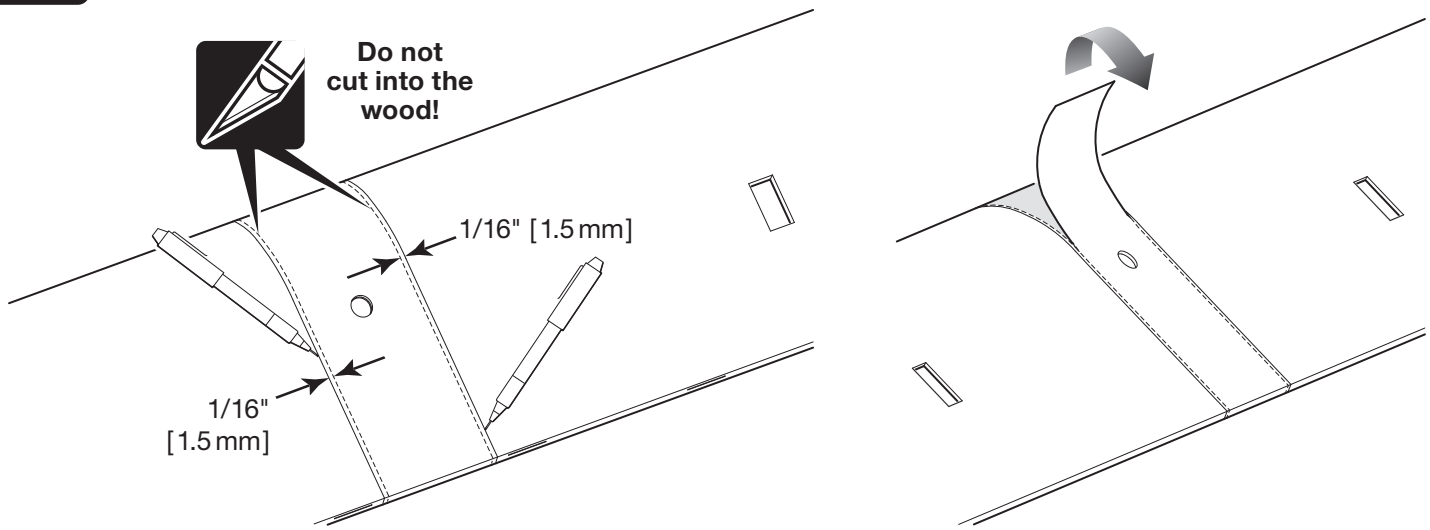

5

Use 30 minute epoxy to glue the wing, centered in the fuselage. Wipe off any access epoxy with a paper towel dampened in denatured alcohol before the epoxy hardens.

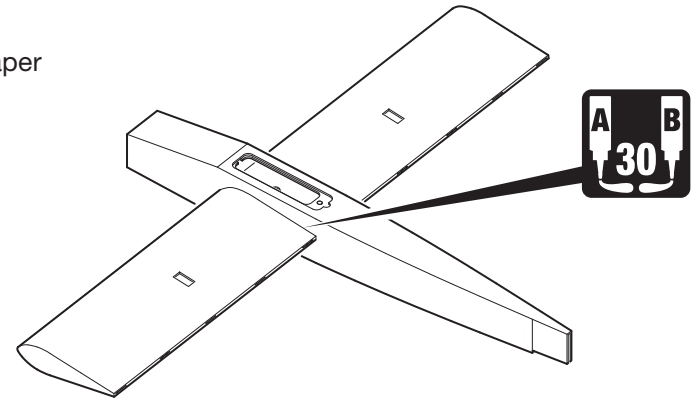

6

Starting with the left aileron, install the aileron hinges.

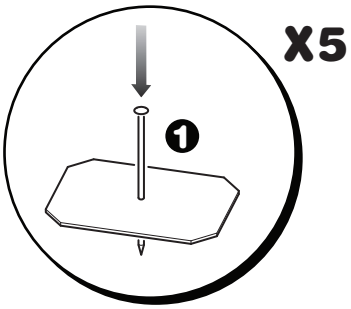

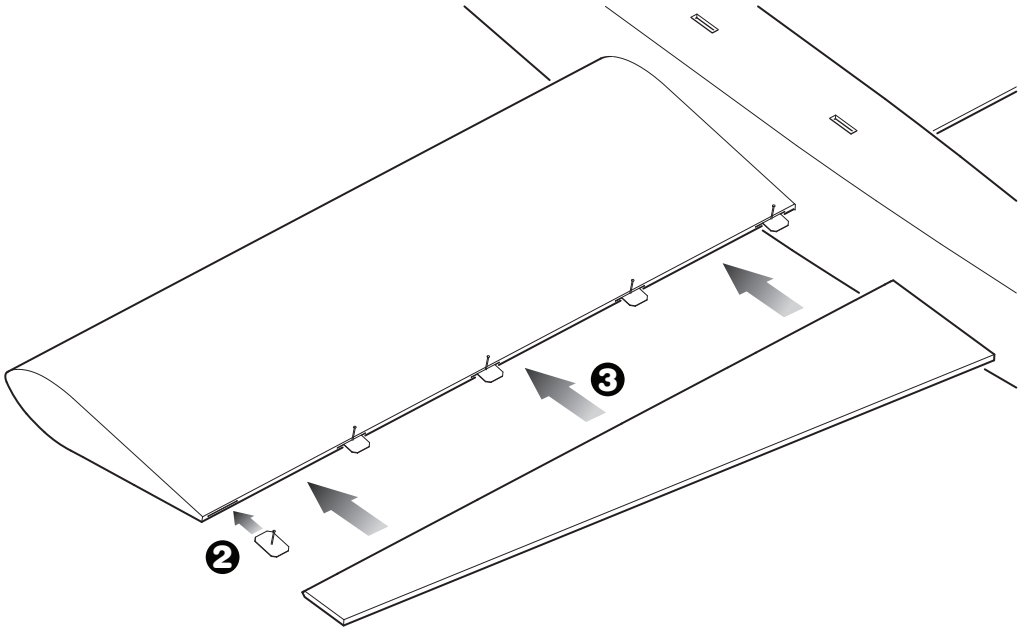

7

Glue the hinges in the wing and aileron.

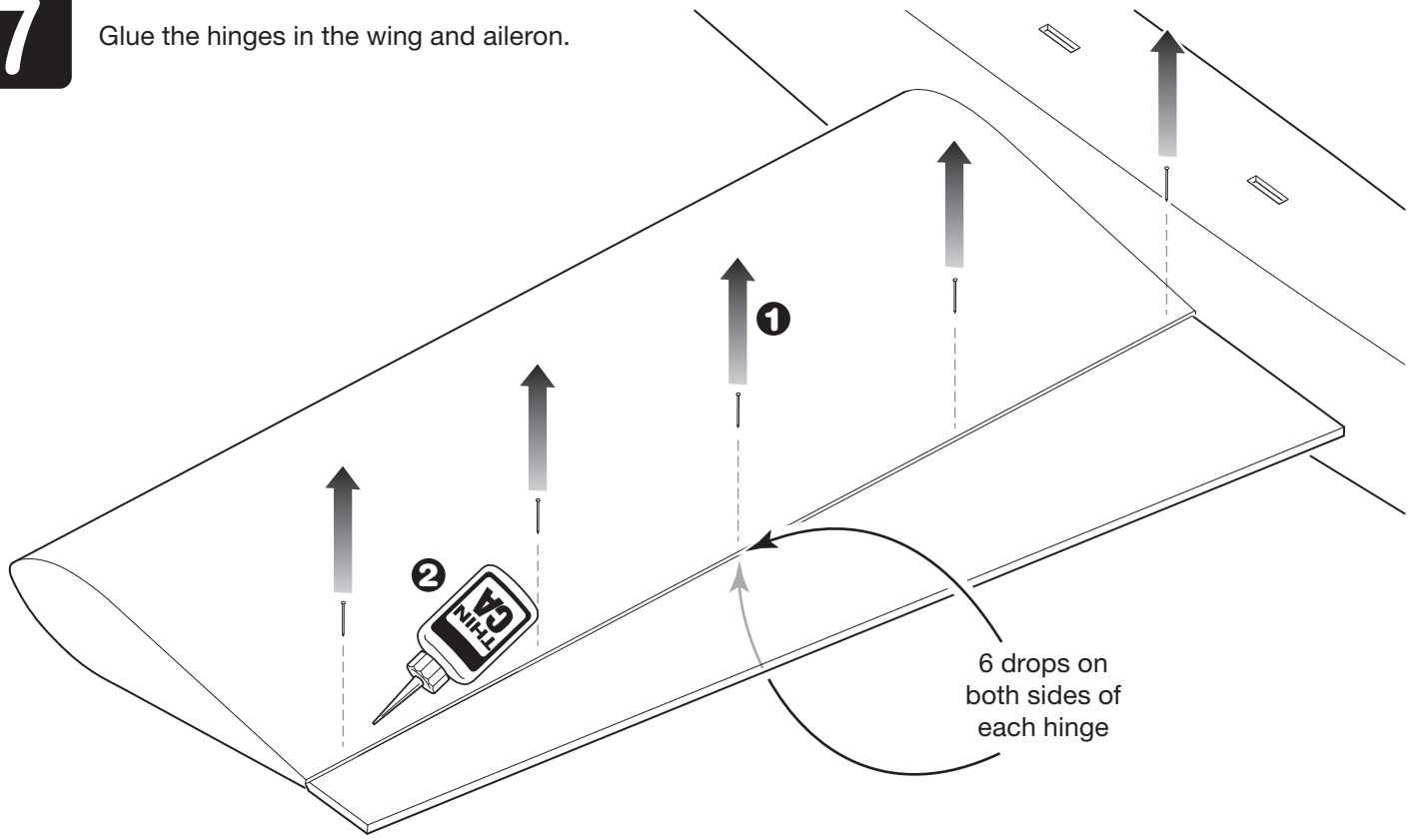

8

Prepare the aileron servo.

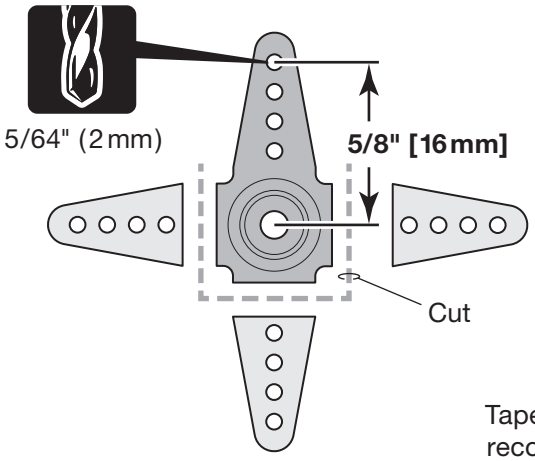

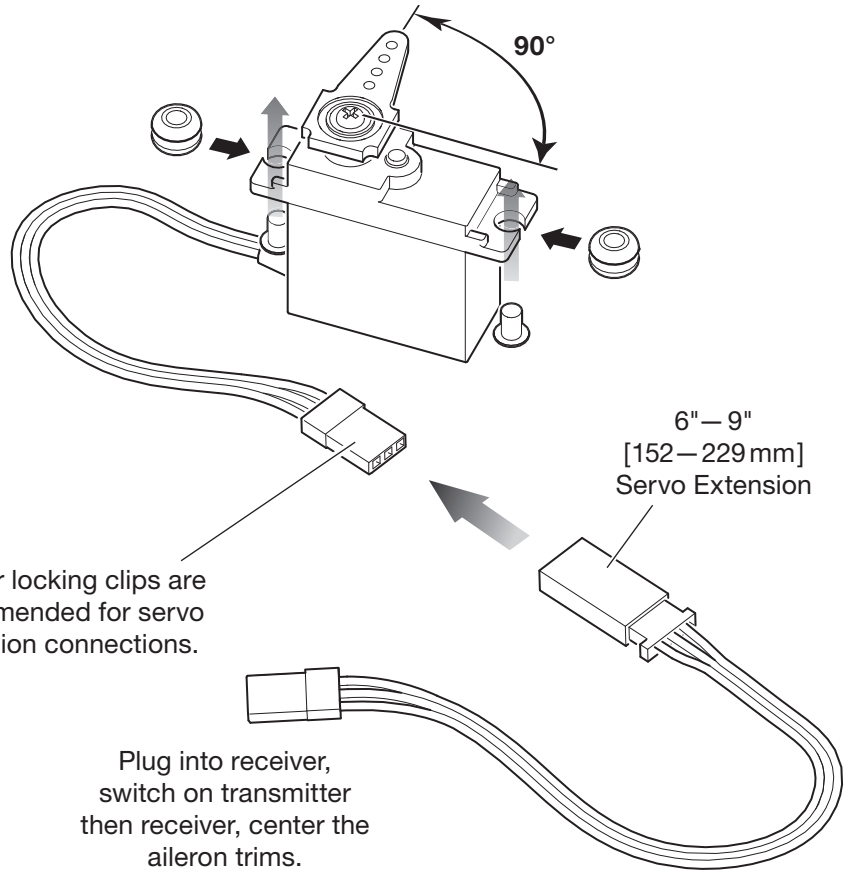

9

Install the aileron servo.

Tie string to the servo extension and pull it through the wing.

Screws included with servo.

1/16" [1.5 mm]

CA

10

Install the aileron clevis.

2-56 x 12" [305 mm] Pushrod

Silicone Clevis Retainer

Nylon Clevis

25 Turns

(1) Nylon Clevis

(1) Clevis Retainer

11

Install the aileron control horn.

2 x 10 mm
Machine
Screw

90 degrees

5/64" (2 mm)

Control Horn
Back Plate

(1) Control Horn

(1) Control Horn Back Plate

(2) M2 x 8 Machine Screw

Align Holes with
Hinge Line

12

Make a 90 degree bend and trim to 1/4" [6mm]. Connect the aileron pushrod to the aileron servo arm using a Faslink.

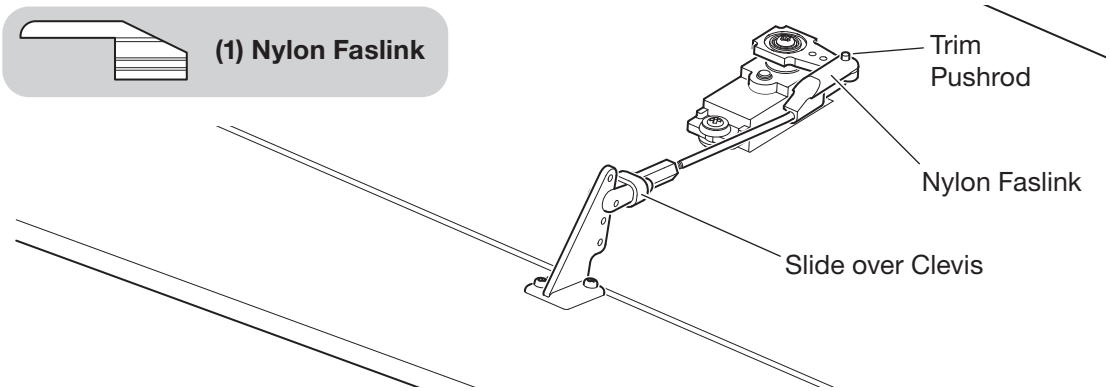

13

Return to step 6 and install the aileron and servo in the right wing.

14 FUSELAGE ASSEMBLY INSTALL THE TAIL SURFACES

Test fit the horizontal stabilizer on the fuselage. Mark, cut, and remove the covering on the bottom of the horizontal stabilizer and from the fuselage. Do not cut into the wood.

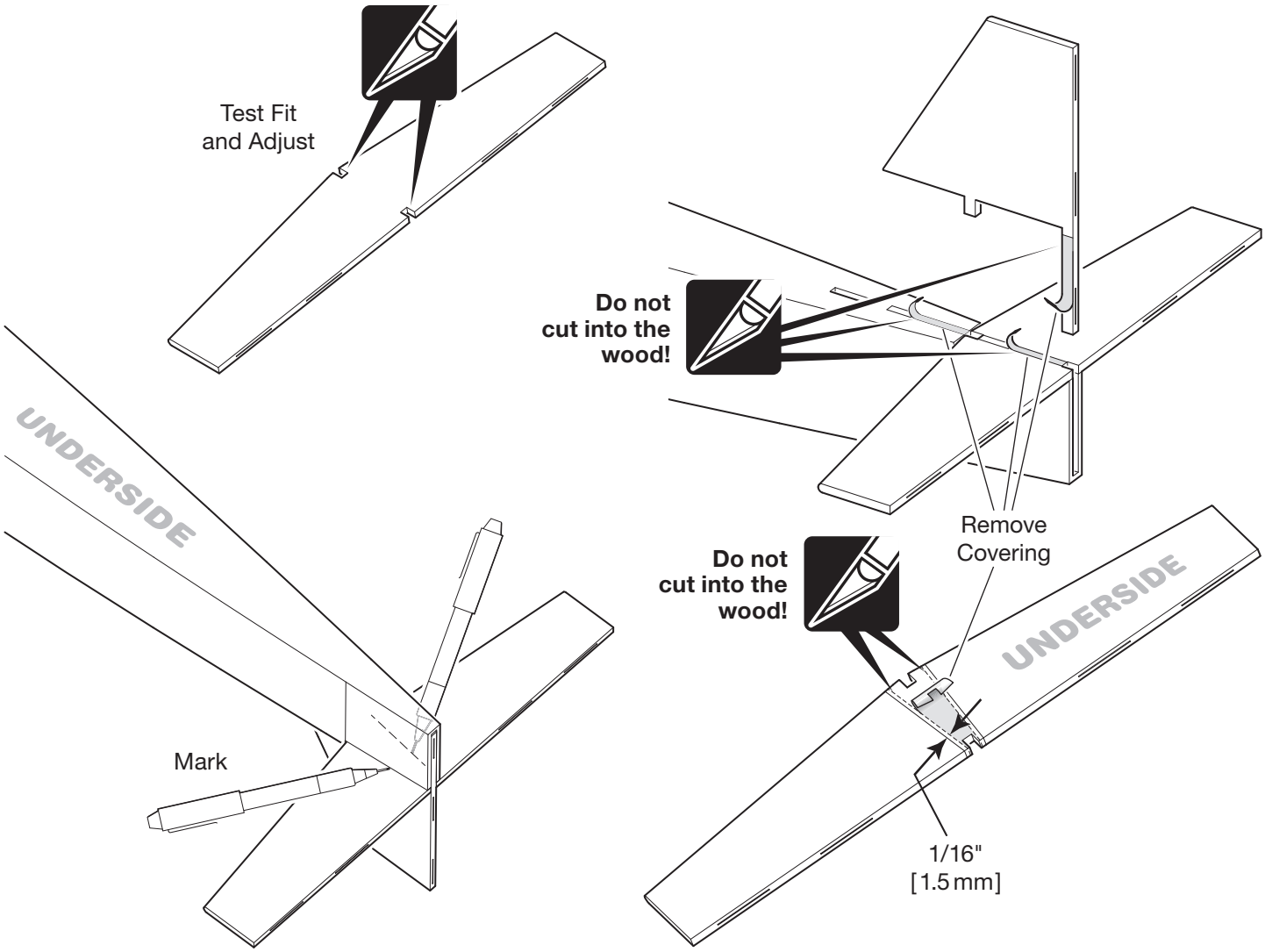

15

View the model from the back. If the horizontal stabilizer is not parallel to the wing, lightly sand the stabilizer seat until it is. Use 30-minute epoxy to glue the horizontal stabilizer and vertical fin to the fuselage.

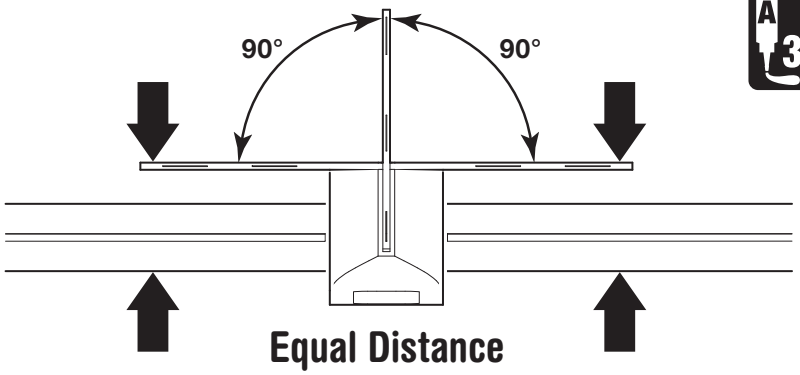

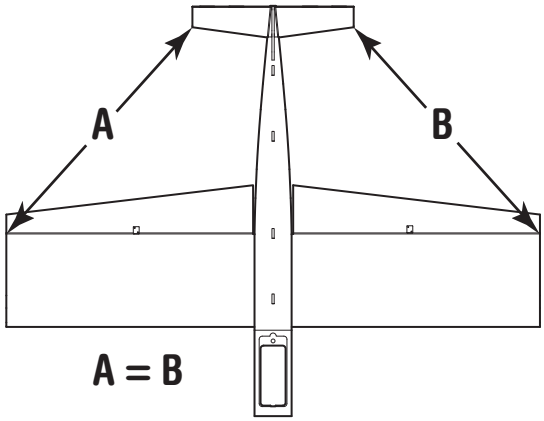

16

MAIN LANDING GEAR INSTALLATION

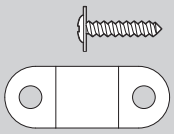

(8) M2 x 10 Washer Head ST Screw

(4) Nylon Landing Gear Strap

1/16" (1.5 mm)

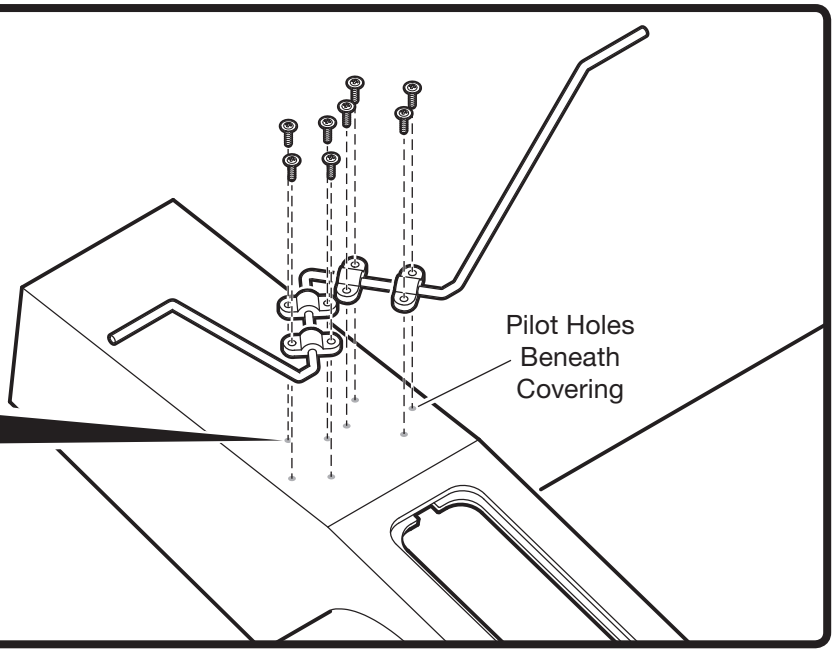

17

Install the main wheels.

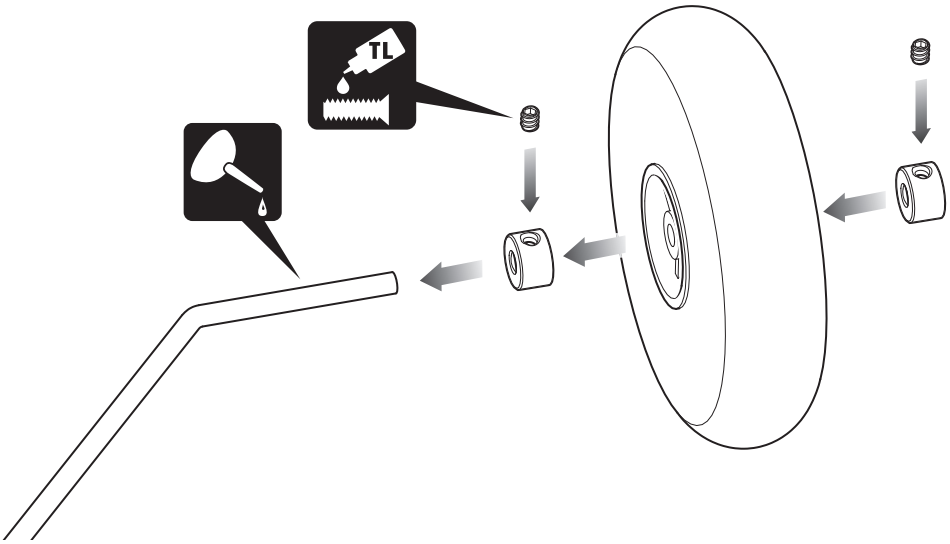

(4) 3mm Wheel Collar

(4) 3 x 3mm Set Screw

18 TAIL CONTROL SURFACE INSTALLATION

Test fit the elevators, CA hinges and the elevator joiner wire together. Check that both elevator halves are aligned.

If they are not, adjust the bend in the elevator joiner wire until the elevator halves are aligned.

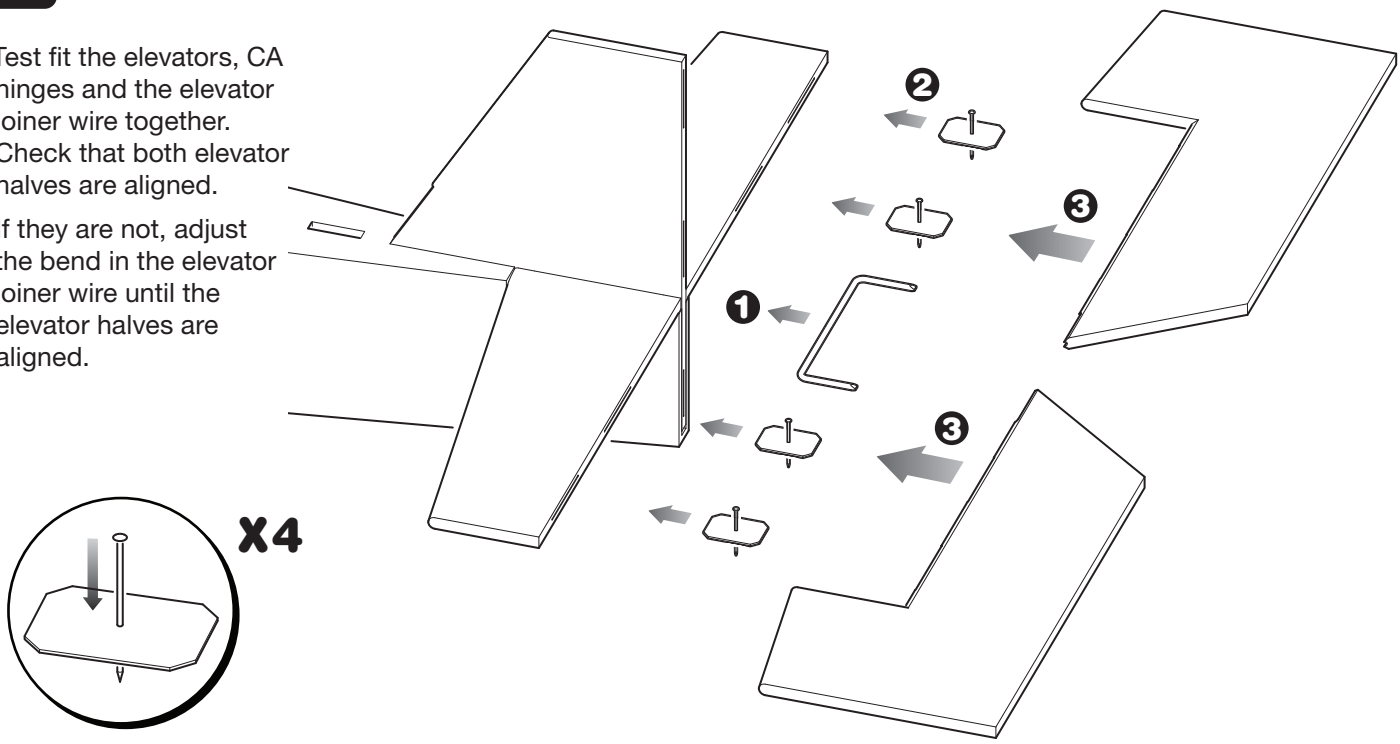

19

Attach the elevators to the horizontal stabilizer.

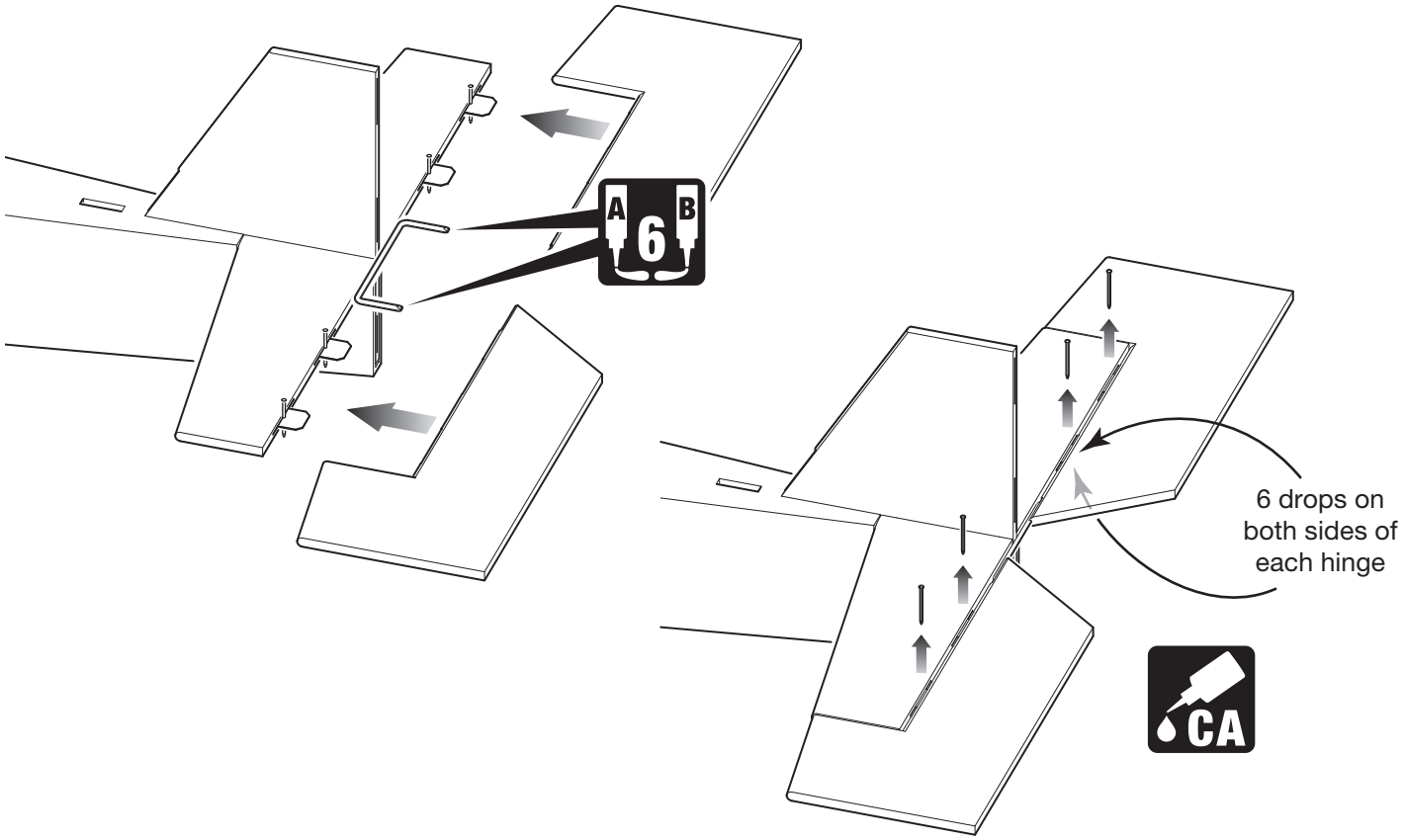

20

Install the rudder.

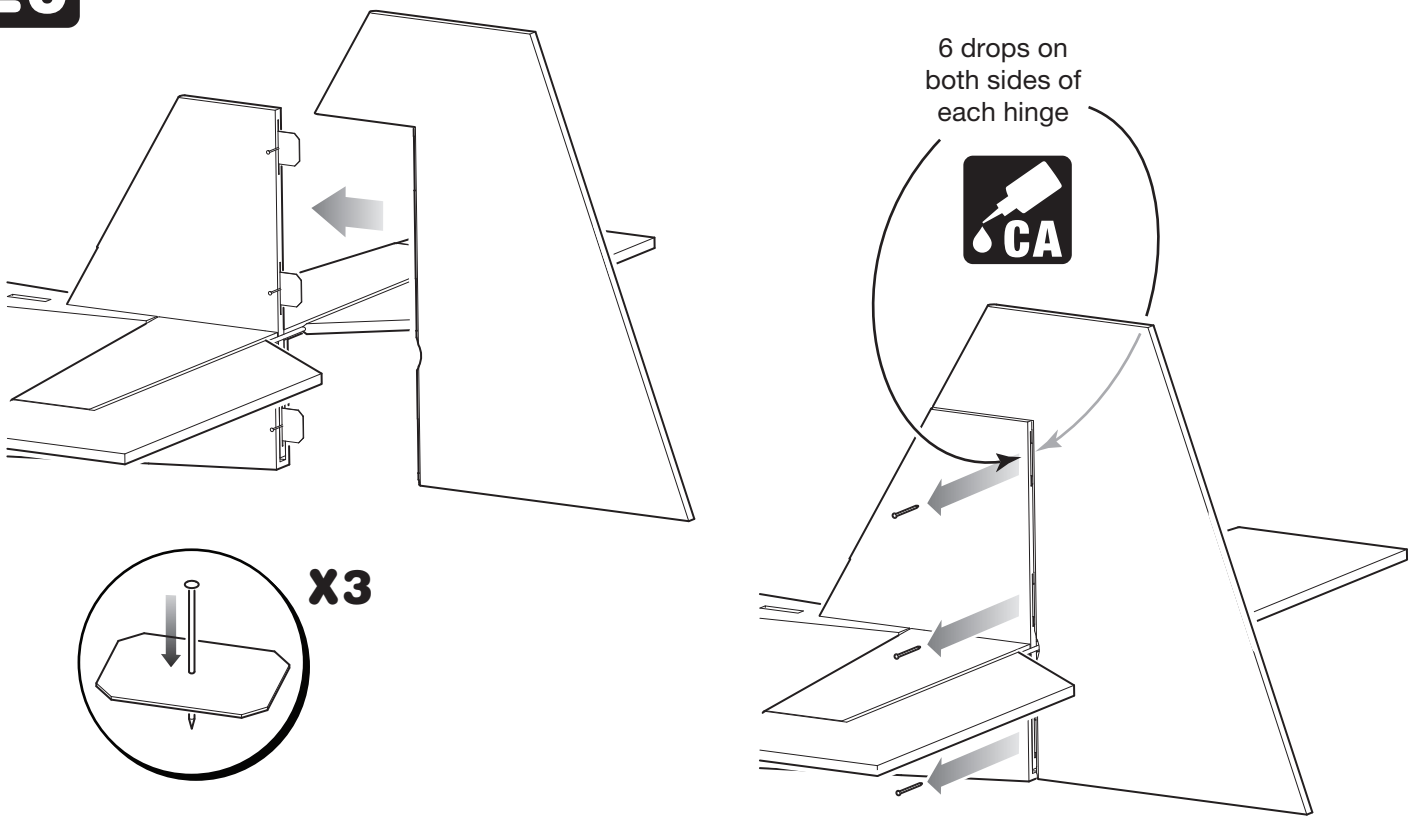

21

Install the tail gear.

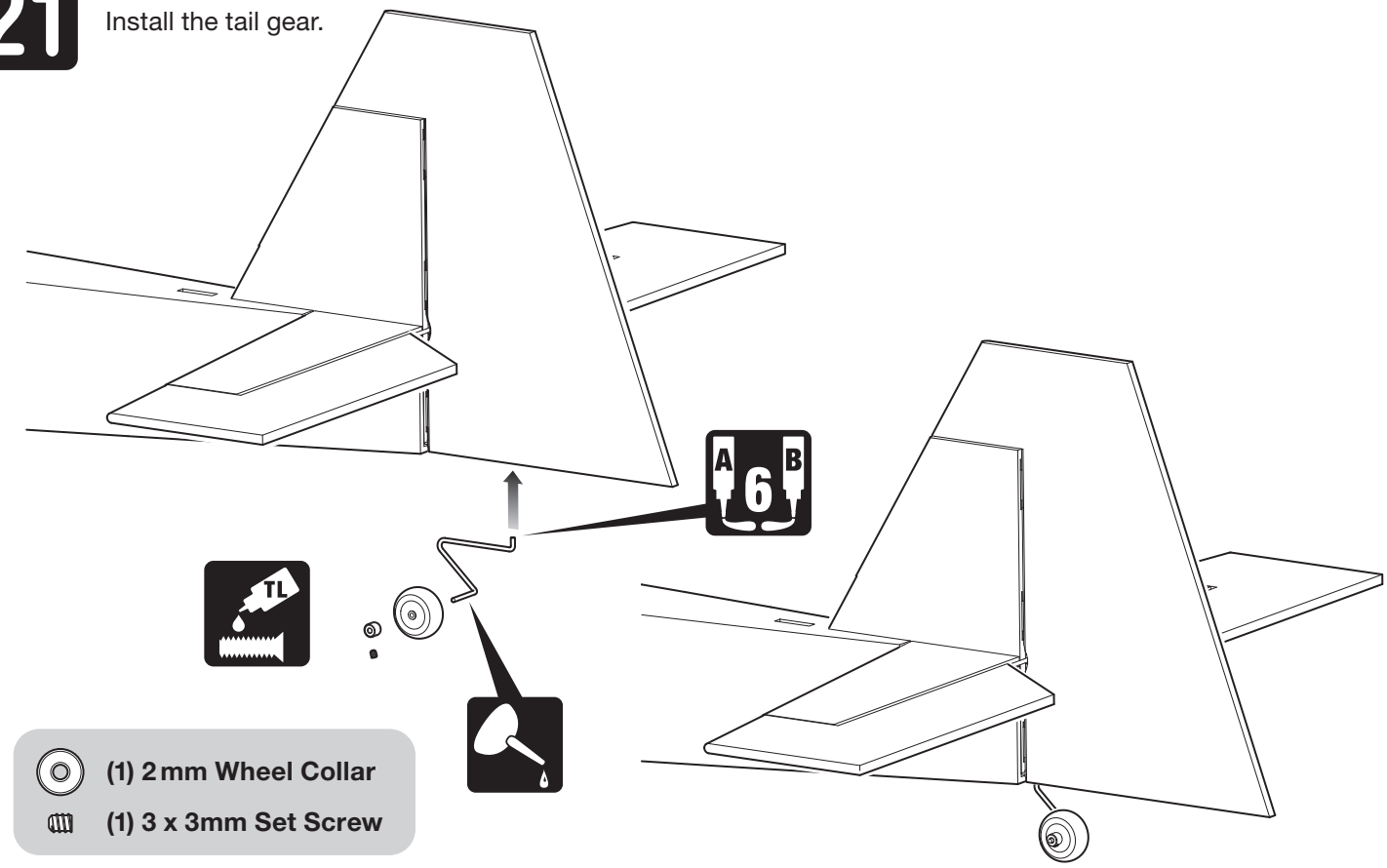

22 INSTALL THE ELEVATOR AND RUDDER SERVOS

Cut a 30mm long piece of adhesive backed hook and loop material. Mount the receiver to the wing underside with the piece of hook and loop material.

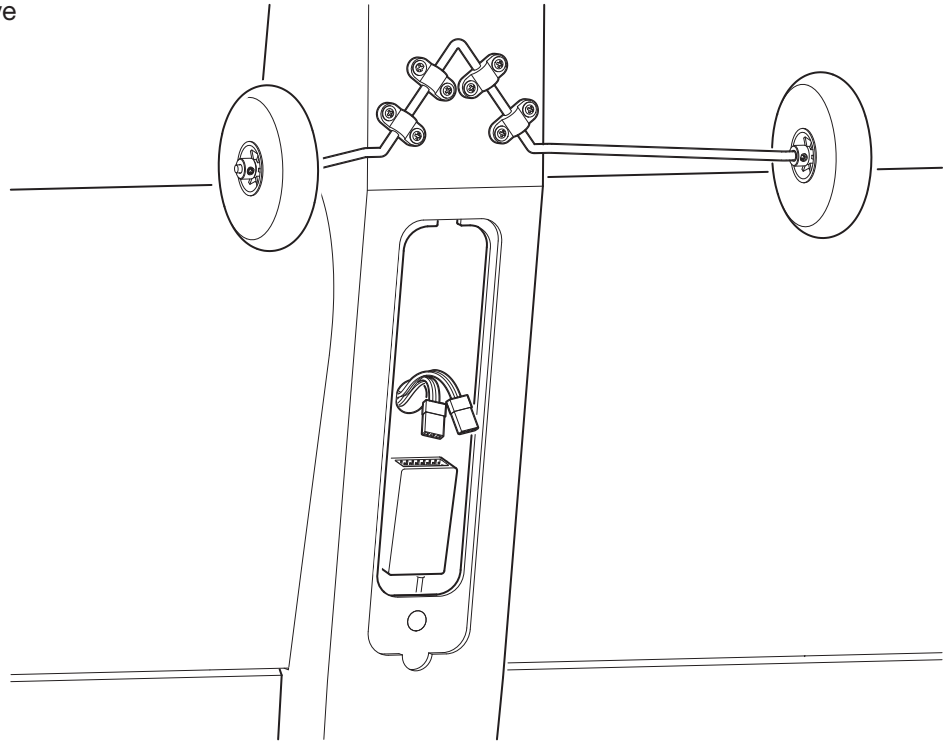

23

Assemble the elevator servo.

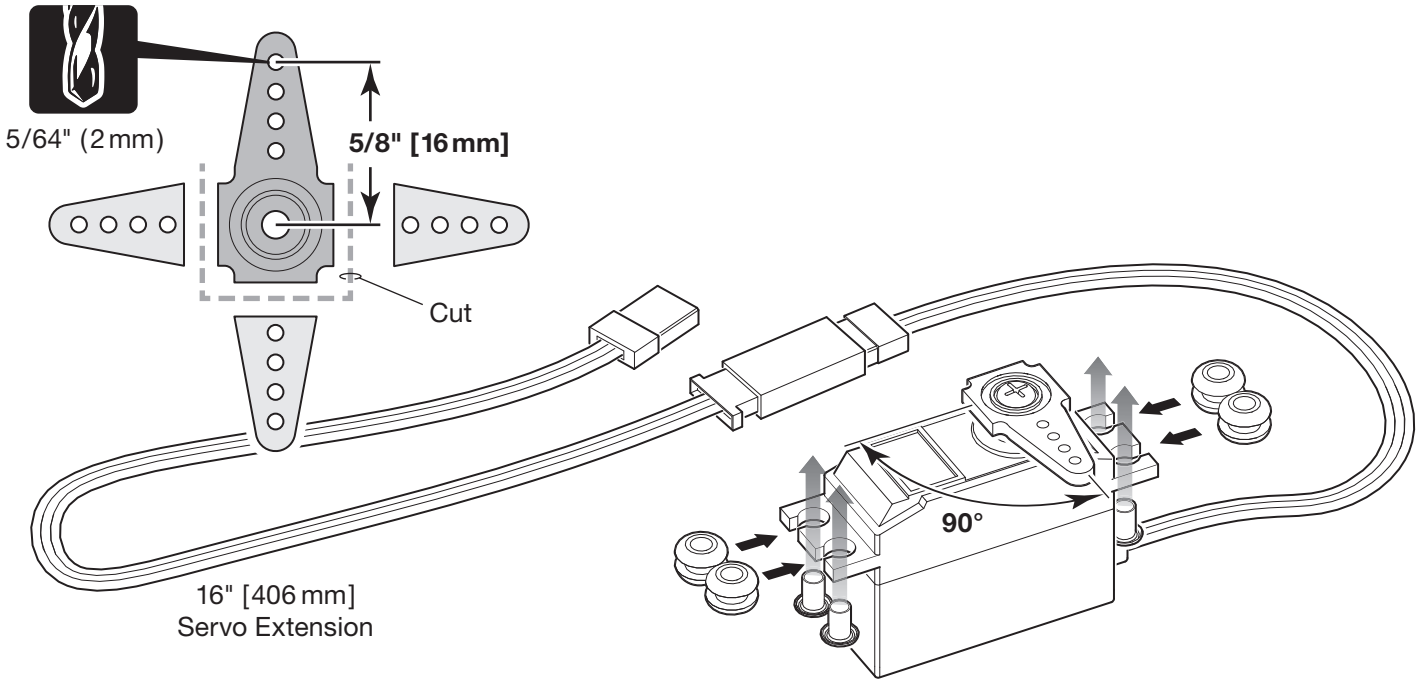

24

Install the elevator servo in the fuselage with the screws included with the servo.

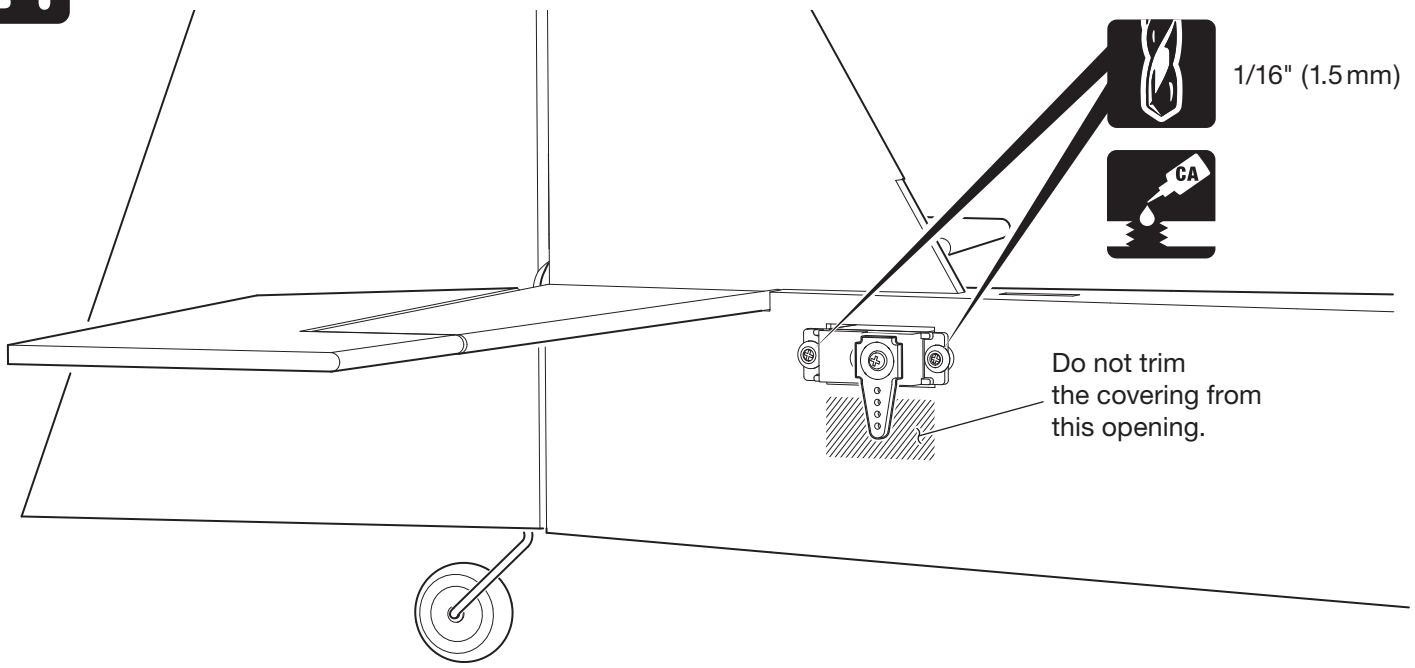

25

Install the elevator pushrod and control horn following the same procedure used to install the aileron pushrods.

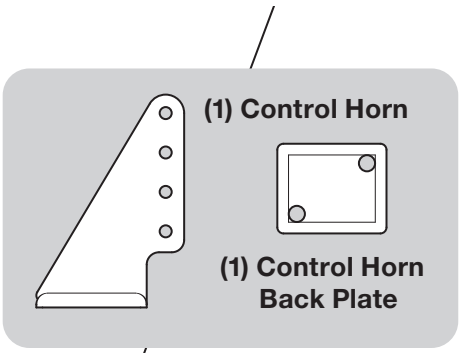

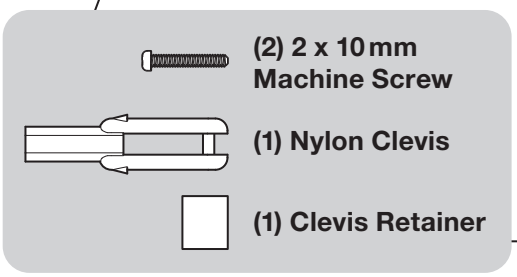

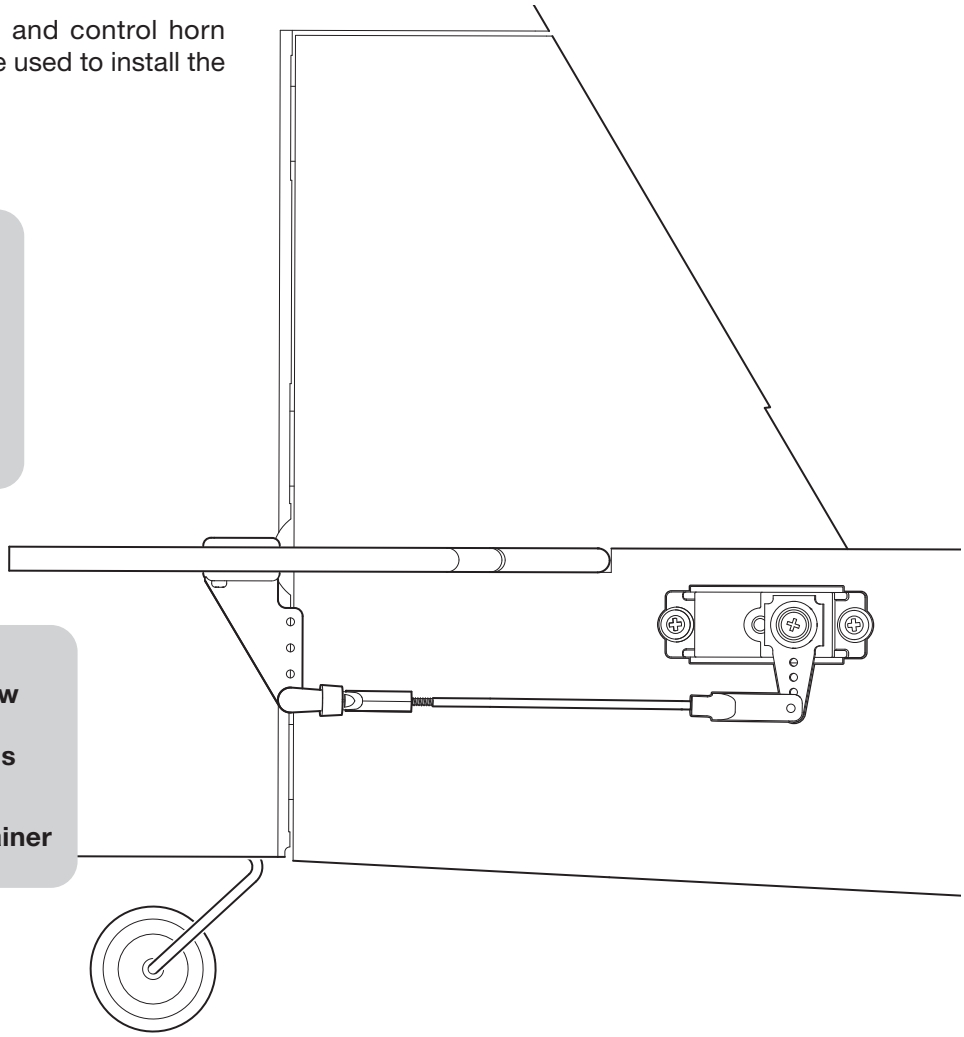

26

Install the rudder servo and pushrod, the same as the elevator servo and pushrod.

5/64" (2 mm)

5/8" [16 mm]

Cut

Do not trim the covering from this opening.

27 FINAL ASSEMBLY

Glue the canopy top piece to the fuselage.

90º

A 6 B

Do not cut into the wood!

28

Install the motor on the front of the fuselage.

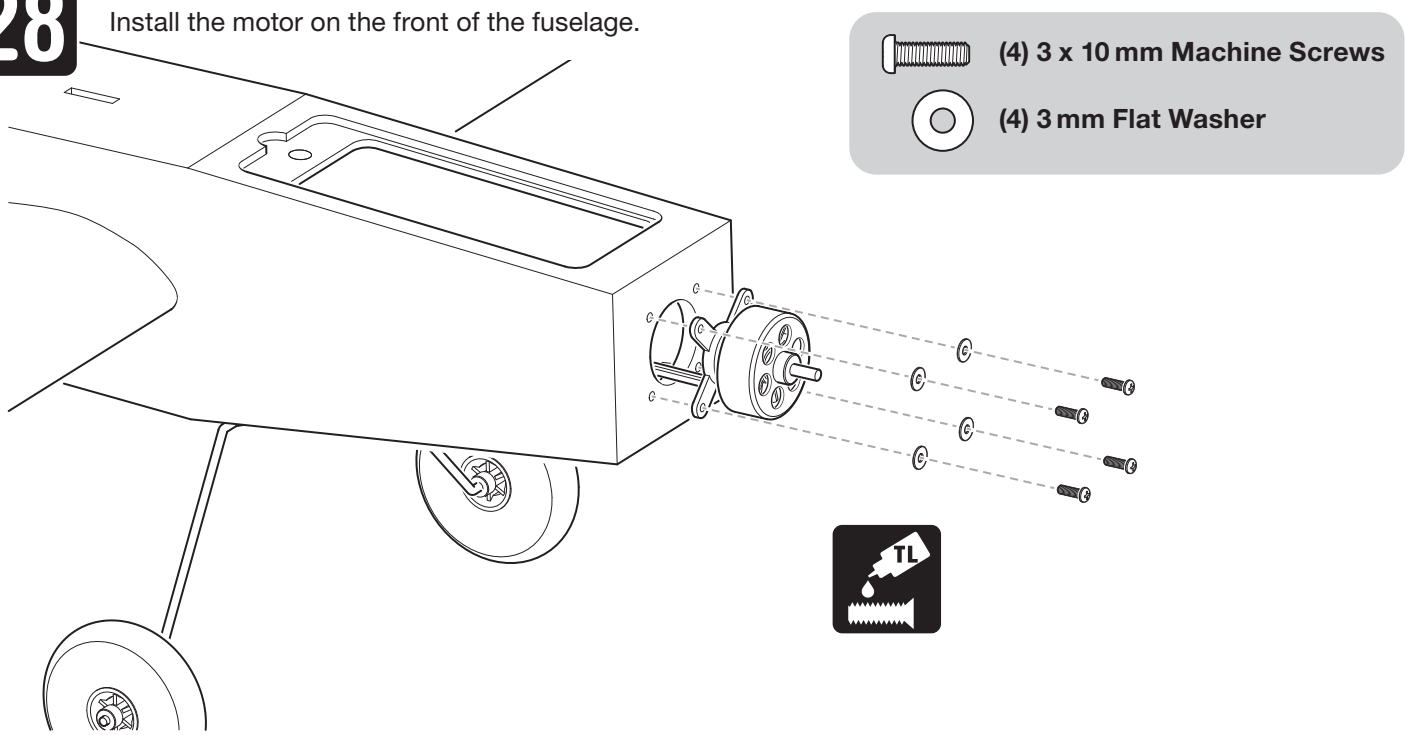

29

Cut a piece of adhesive backed hook and loop material 25mm long. Mount the ESC to the inside of the fuselage with the piece of adhesive backed hook and loop material. Connect the ESC motor wires to the motor. Plug the ESC into your receiver. With the propeller removed, switch on your transmitter and plug the motor battery into the ESC. Follow the instructions included with your ESC to arm it. Advance the throttle and check the rotation of the motor. It should rotate counter-clockwise when viewed from the front. If it is rotating in the wrong direction, switch two of the motor wires. Disconnect the motor battery and switch off the transmitter.

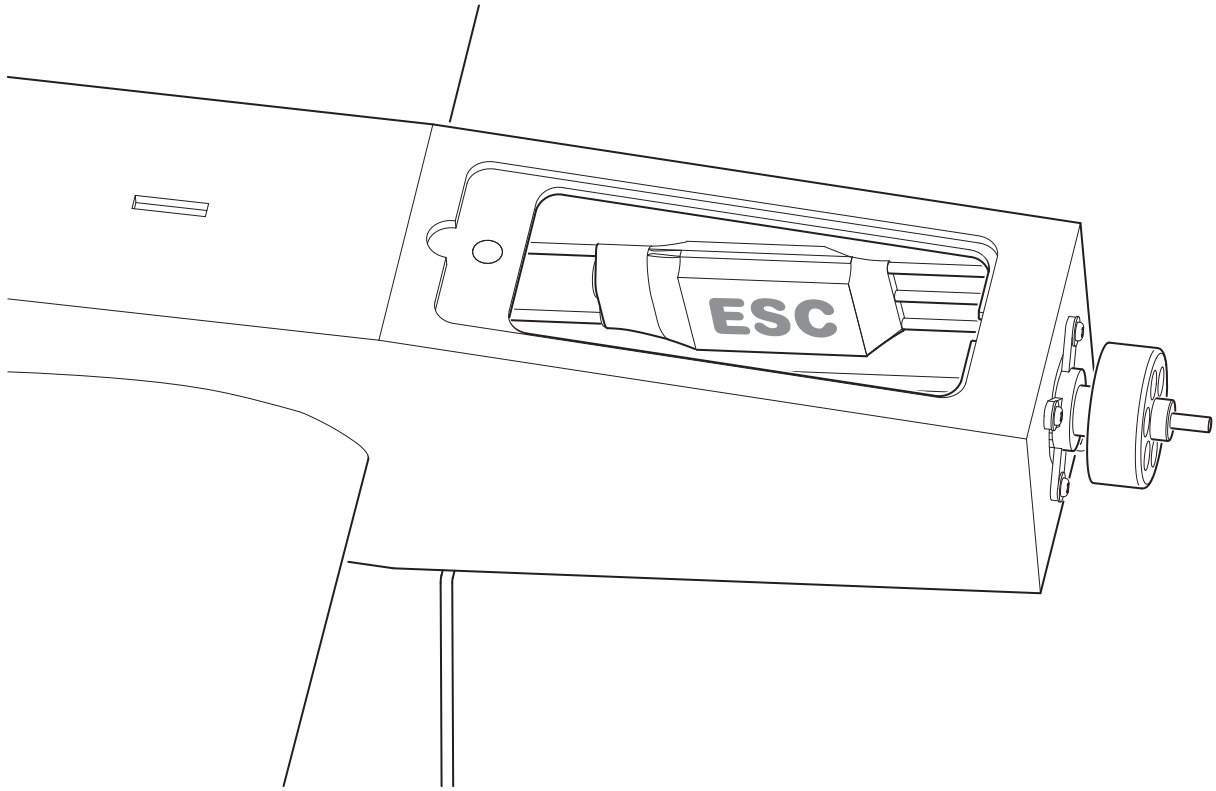

30

Install the remaining adhesive backed hook and loop strip. Attach the opposite side of the strip to your motor battery.

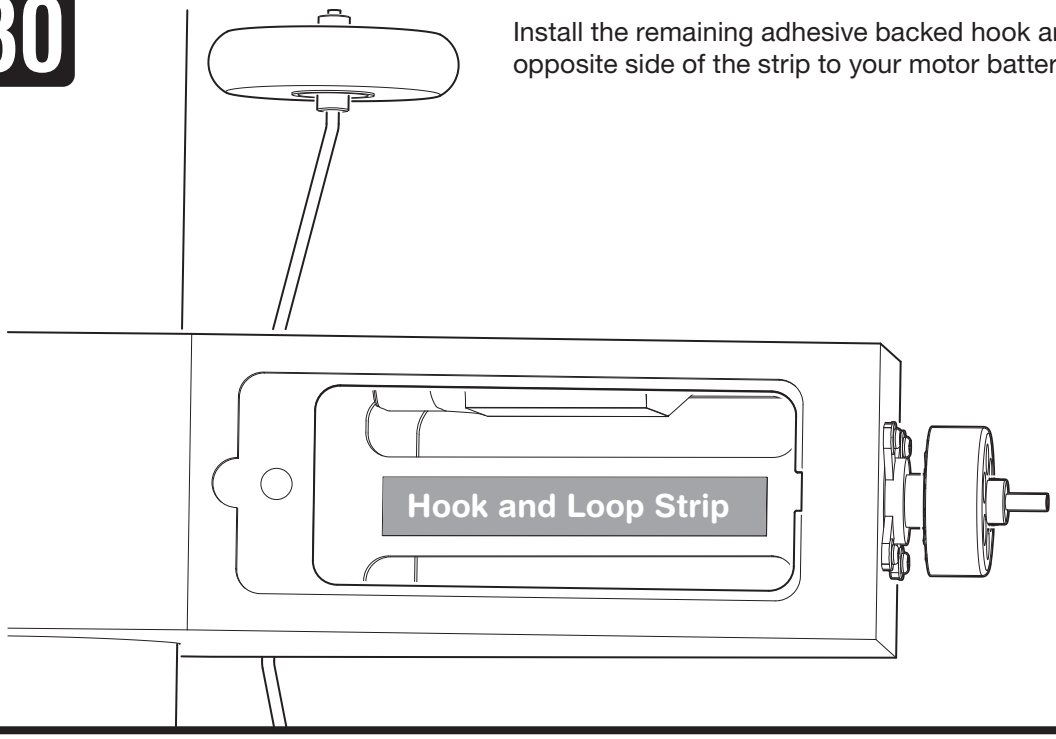

31

Locate the double sided hook and loop battery strap.

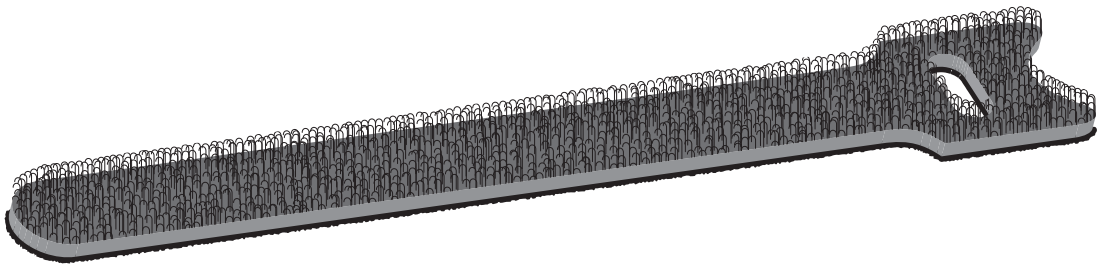

32

Install the battery strap.

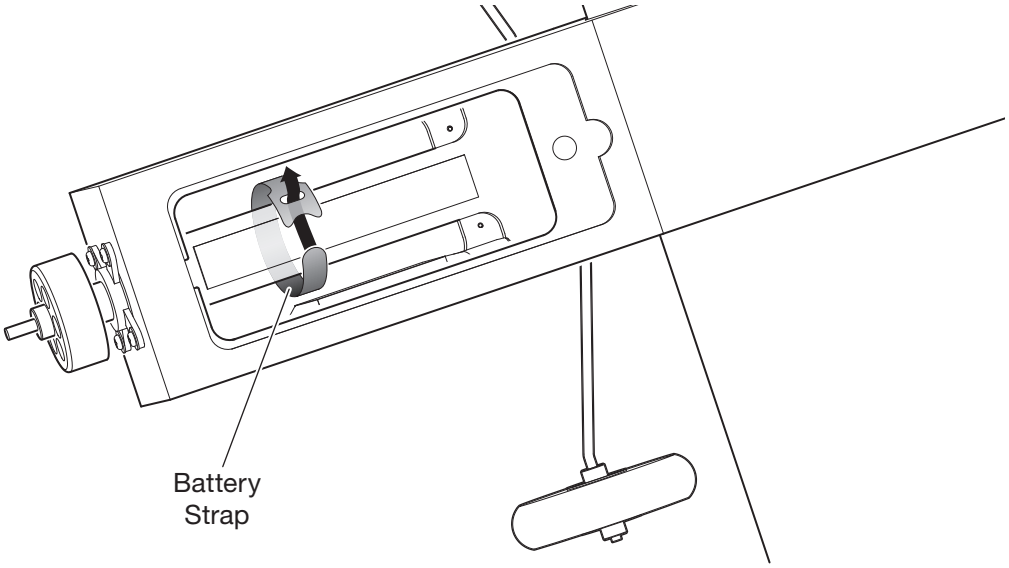

33 SET UP THE FAILSAFE

With the propeller removed from the airplane, configure the failsafe for your radio according to manufacturer instructions. The failsafe should be set so that the motor stops if the signal from the transmitter is lost. Once the fail safe has been set, start the motor and switch off the transmitter. The motor must stop. If it does not, reset the failsafe and test again.

34 APPLY THE DECALS

1. Cut the decals from the decal sheet.
2. Be certain the model is clean and free from oily fingerprints and dust. Prepare a pan or small bucket with a mixture of liquid soap and warm water – ½ teaspoon of soap per gallon of water. Submerse one of the decals in the solution and peel off the paper backing. NOTE: Even though the decals have a “sticky-back” and are not the water transfer type, submersing them in soap and water allows accurate positioning and reduces air bubbles underneath.
3. Position decal on the model where desired. Holding the decal down, use a paper towel to wipe most of the water away.
4. Use a piece of soft balsa or something similar to squeegee the remaining water from under the decal. Apply the rest of the decals using the same method.

35 GET THE MODEL READY TO FLY

Check the Control Directions

CAUTION: DO NOT install the propeller until instructed to do so.

1. Switch on the transmitter with the throttle stick in the lowest position and connect the flight battery to the ESC. Center the trims on the transmitter and the servo arms on the servos.
2. Center the control surfaces.
3. Make certain that the control surfaces respond in the correct direction as shown in the diagram. If any of the controls respond in the wrong direction, use the servo reversing in the transmitter to reverse the servos connected to those controls. Be certain the control surfaces have remained centered. Adjust if necessary.

4-CHANNEL RADIO SETUP (STANDARD MODE 2)

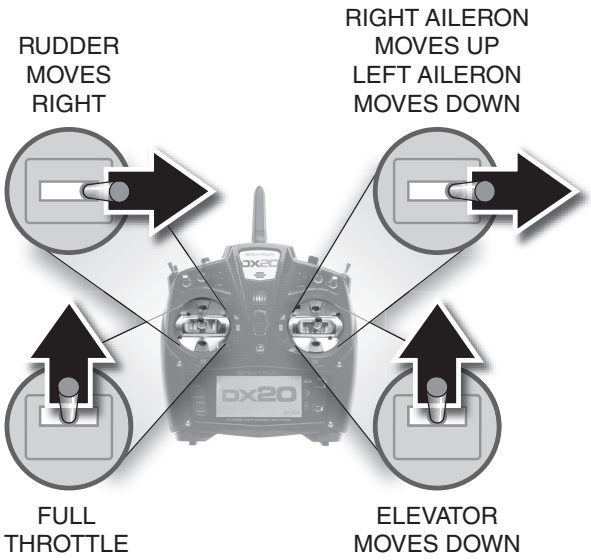

36 Set the Control Throws

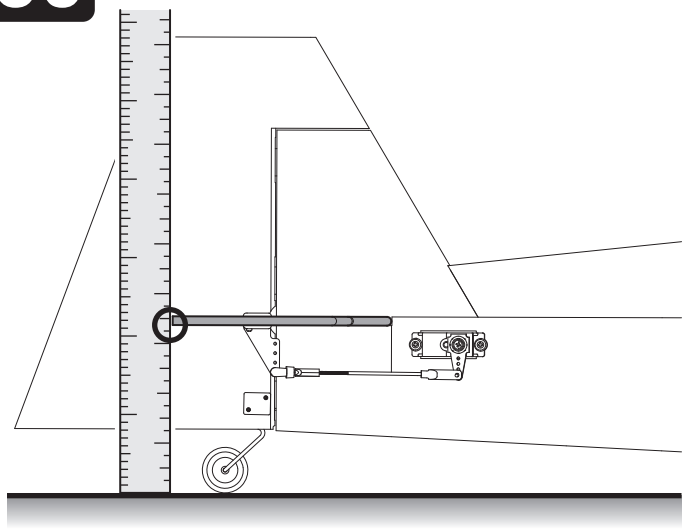

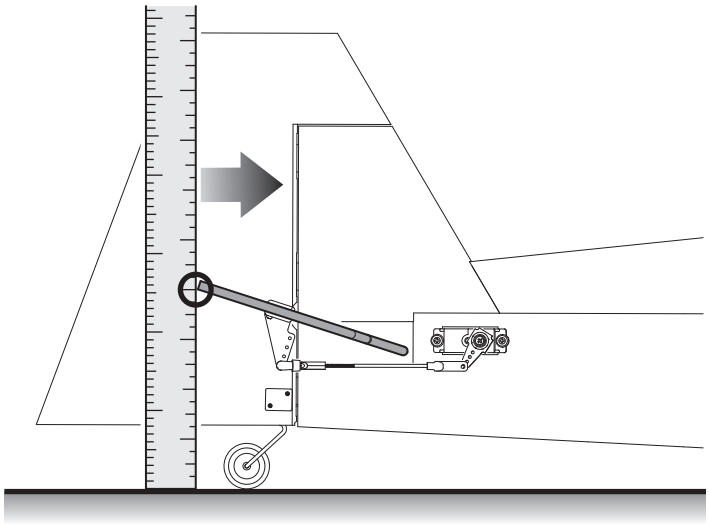

1. Hold a ruler against the widest part of the elevator surface and measure the 3D rate throw first.
2. Adjust the location of the pushrod on the servo arm or on the control horn first. Then, use the endpoint adjustment in your transmitter to fine tune the elevator throws.
3. Measure and set the low and high rate throws using the rates switch on the transmitter.
4. Next, measure and set the 3D, high, and low rate throws for the rest of the control surfaces the same way.

If your radio does not have a rate switch, we recommend setting the throws at the high rate settings.

IMPORTANT: With the propeller removed and the control throws set, set and check the **failsafe** on the transmitter.

Check the failsafe by switching off the transmitter with the motor battery connected to the ESC and the motor running at a slow speed. The motor must stop running when the transmitter is switched off.

Once you have determined that it is operating correctly, switch off the receiver or unplug the motor battery and then switch off the transmitter.

These are the recommended control surface throws:

	LOW RATE		HIGH RATE	
	Up & Down	Expo.	Up & Down	Expo.
ELEVATOR	3/4" [19 mm]	60%	1-1/4" [32 mm]	60%
	Right & Left	Expo.	Right & Left	Expo.
RUDDER	1-3/4" [44 mm]	30%	2-1/2" [64 mm]	30%
	Up & Down	Expo.	Up & Down	Expo.
AILERONS	1" [25 mm]	60%	1-3/8" [35 mm]	70%

	3D RATE	
	Up & Down	Expo.
ELEVATOR	1-3/4" [44 mm]	75%
	Right & Left	Expo.
RUDDER	3-1/2" [89 mm]	40%
	Up & Down	Expo.
AILERONS	2-1/2" [64 mm]	75%

37 Install the Propeller and Spinner

1. Balance the propeller.
2. Install the prop adapter, propeller, washer and then the prop nut. Tighten firmly.

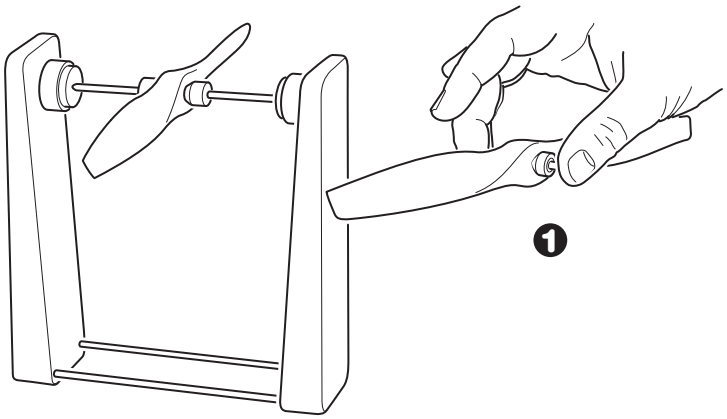

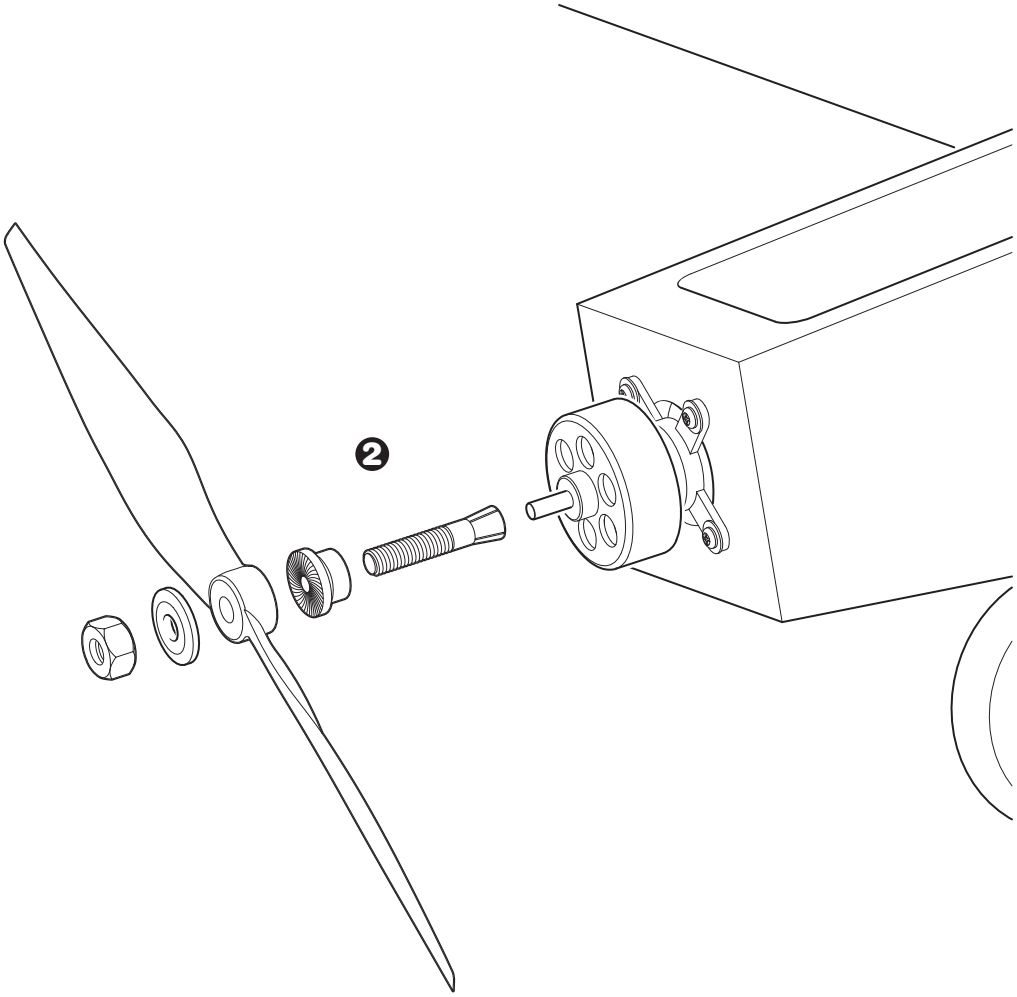

38 Balance the Model Laterally

1. With the wing level, have an assistant help you lift the model by the propeller shaft and the bottom of the fuse under the TE of the fin. Do this several times.
2. If one wing always drops when you lift the model, it means that side is heavy. Balance the airplane by adding weight to the other wing tip. **An airplane that has been laterally balanced will track better in loops and other maneuvers.**

39 Balance the Model C.G.

CAUTION: DO NOT OVERLOOK THIS IMPORTANT PROCEDURE. A model that is not properly balanced may be unstable and possibly unflyable.

1. Mark the C.G location on the bottom of the wing 2-1/8" (54 mm) to 3" (76 mm) from the leading edge.
2. With the plane **ready to fly**, and the motor batteries installed but not plugged in, use a Great Planes C.G. Machine or apply narrow (1/16" [1.5 mm]) strips of tape at the front and rear C.G. locations. Lift the model between the strips of tape with your fingers to check the C.G. location. **Do not balance the model outside this C.G. range.**
3. First, move the flight battery forward or aft to adjust the C.G. location. If the plane still balances outside the range use Great Planes "stick on" weight (GPMQ4485) to balance the plane. Place incrementally increasing amounts of weight on the bottom of the fuselage over the location where it would be mounted inside until the model balances. A good place to add stick-on nose weight is to the firewall or inside the LiPo compartment. Once you have determined if additional weight is needed, permanently attach the weight with glue or screws.
4. **IMPORTANT:** If you found it necessary to add any weight, recheck the C.G. after the weight has been installed.

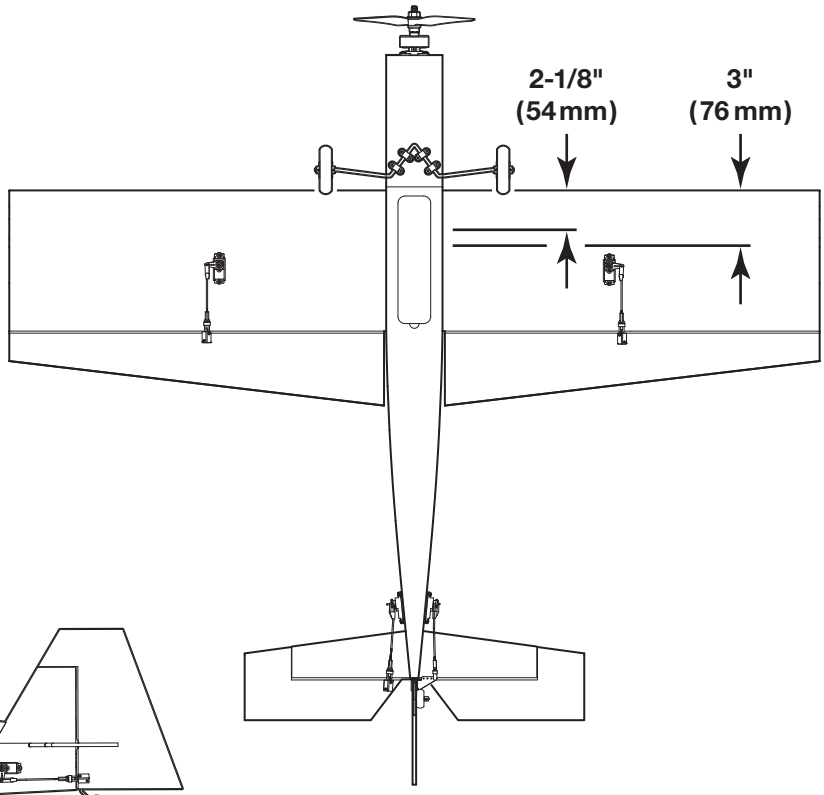

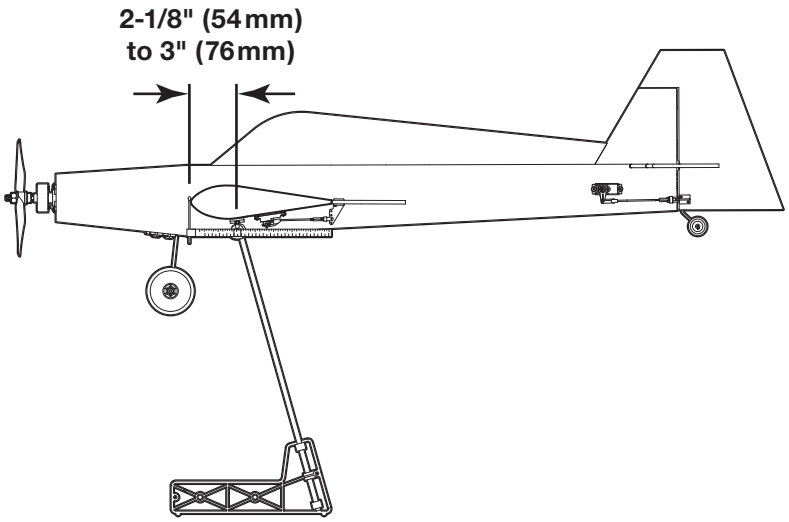

This model belongs to:

Name

Address

City, State, Zip

Phone Number

AMA Number

FAA Number

40 PREFLIGHT

NOTICE: Unless the instructions that came with your radio system state differently, the **initial** charge on **new NiMH** transmitter and receiver batteries should be done for 15 hours **using the slow-charger that came with the radio system**. This will "condition" the batteries so that the next charge may be done using the fast-charger of your choice. If the initial charge is done with a fast-charger the batteries may not reach their full capacity and you may be flying with batteries that are only partially charged.

If using LiFe batteries in your transmitter, be sure to follow the instructions included with the correct charger designed to charge LiFe batteries.

Identify Your Model

You should always have your name, address, telephone number and AMA number on or inside your model. It is **required** at all AMA R/C club flying sites and AMA-sanctioned flying events. Fill out the identification tag on page 25 and place it on or inside your model. You must also have your FAA number on your plane and accessible without any tools.

Charge the Batteries

Always charge your transmitter batteries the night before you go flying, and at other times as recommended by the radio manufacturer.

Ground Check and Range Check

Follow the radio manufacturer's instructions to ground-check the operational range of your radio before the first flight of the day. This should be done once with the motor off and once with the motor operating at various speeds. If the control surfaces do not respond correctly, **do not fly!** Find and correct the problem first. Look for loose servo connections or broken wires, corroded wires on old servo connectors, or loose motor connectors. Try relocating the receiver antennas away from the motor battery or engine.

41 FLYING

The Mini Uproar plane was designed to provide a smaller and more economical version of the very popular Uproar V2 sport plane. The design was then refined to add a bit more 3D flavor. It is a great little sport plane that flies well on the 3s and 4s packs that are very common in the hobby. It has been flown on batteries from 1800 to 3200 mAh. We like the balance of weight and duration with 2200 mAh batteries. The CG range is very wide and it will fly very nicely at the forward balance point with low control throw rates. However, you can crank up the throws, move the CG back, and it becomes a very different flying airplane. The profile canopy/turtle deck is not only for appearance, but also functionality. High alpha 3D flight and knife edge are greatly enhanced with this canopy. In 3D mode, knife edge is easy and stable, and even knife edge loops can be completed. Wing tip plates (side force generators) are not needed! The suggested power system provides fantastic performance on a budget.

Gary Wright

⚠ **CAUTION:** (THIS APPLIES TO ALL R/C AIRPLANES): If, while flying, you notice an alarming or unusual sound such as a low-pitched "buzz," this may indicate control surface *flutter.* Flutter occurs when a control surface (such as an aileron or elevator) or a flying surface (such as a wing or stab) rapidly vibrates up and down (thus causing the noise). In extreme cases, if not detected immediately, flutter can actually cause the control surface to detach or the flying surface to fail, thus causing loss of control followed by an impending crash. If flutter is detected, slow the model **immediately** and land as soon as safely possible. Identify which surface fluttered (so the problem may be resolved) by checking all the servo grommets for deterioration or signs of vibration. Make certain all pushrod linkages are secure and free of play. If it fluttered once, under similar circumstances it will probably flutter again unless the problem is fixed. Some things which can cause flutter are: Excessive hinge gap; Not mounting control horns solidly; Poor fit of clevis pin in horn; Side-play of wire pushrods caused by large bends; Excessive free play in servo gears; Insecure servo mounting; and flying an over-powered model or at excessive speeds.

Takeoff

It is a good idea to have a timer set on your transmitter, wrist watch or cell phone. We found that the plane can fly for 6 to 8 minutes or more on a 4S 2200 mAh LiPo battery. Set the timer for 5 minutes for the first few flights. When

41 FLYING Continued

recharging the battery note how much capacity was put back into the battery. To maintain the performance of LiPo batteries, no more than 80% of the capacity should be drained from the battery on a flight. Adjust the timer as needed.

Before taking off, see how the model handles on the ground by doing a few practice runs at **low speeds** on the runway. Hold "up" elevator to keep the tail wheel on the ground. If necessary, adjust the tail wheel so the model will roll straight down the runway.

Remember to take off into the wind. When you're ready, point the model straight down the runway, hold a bit of up elevator to keep the tail on the ground to maintain tail wheel steering, and then gradually advance the throttle. The plane does not need to gain much speed to take off. So be prepared. One of the most important things to remember with a tail dragger is to always be ready to apply **right** rudder to counteract motor torque. At this moment it is likely that you will need to apply more right rudder to counteract the torque. Be smooth on the elevator stick, allowing the model to establish a **gentle** climb to a safe altitude before turning into the traffic pattern. Once you have the plane trimmed out and see how slow it flies, you will find yourself taking off in 5' to 10' [1.5m to 3m].

Flight

It is a good idea to have an assistant on the flight line with you to keep an eye on other traffic. Take it easy with the model for the first few flights, gradually getting acquainted with it as you gain confidence. Adjust the trims to maintain straight and level flight. After flying around for a while, and while still at a safe altitude with plenty of battery left, practice slow flight and execute practice landing approaches by reducing the throttle to see how the model handles at slower speeds. Add power to see how she climbs as well. Continue to fly around, executing various maneuvers and making mental notes of what trim or C.G. changes may be required to fine-tune the model so it flies the way you like. Mind your flight time, but use this first flight to become familiar with your model before landing. Make sure you have enough battery power remaining to allow a second landing attempt in case you have problems with the first one.

Landing

To initiate a landing approach, lower the throttle while on the downwind leg. Continue to lose altitude, but maintain airspeed by keeping the nose down as you turn onto the crosswind leg. Make your final turn toward the runway (into the wind), keeping the nose down to maintain airspeed and control. We recommend landing on the high or low rates. Do not try to land on 3D rates. Level the attitude when the model reaches the runway threshold, modulating the throttle as necessary to maintain your glide path and airspeed. If you are going to overshoot, smoothly advance the throttle (always ready on the right rudder to counteract torque). Climb out to make another attempt. When the model is a foot or so off the deck, smoothly increase up elevator until it gently touches down. Once the model is on the runway and has lost flying speed, hold up elevator to place the tail on the ground, regaining tail wheel control.

FINAL NOTE: Have a goal or flight plan in mind each time you fly. This may be learning or improving a maneuver or learning how the model behaves at certain speeds and control rates. Every maneuver should be deliberate, not impulsive. A flight plan reduces the chances of crashing your model because of poor planning and impulsive moves.

Have a ball! But always stay in control and fly in a safe manner.

GOOD LUCK AND GREAT FLYING!

42 LIMITED WARRANTY

What this Warranty Covers – Horizon Hobby, LLC, (Horizon) warrants to the original purchaser that the product purchased (the "Product") will be free from defects in materials and workmanship at the date of purchase.

What is Not Covered – This warranty is not transferable and does not cover (i) cosmetic damage, (ii) damage due to acts of God, accident, misuse, abuse, negligence, commercial use, or due to improper use, installation, operation or maintenance, (iii) modification of or to any part of the Product, (iv) attempted service by anyone other than a Horizon Hobby authorized service center, (v) Product not purchased from an authorized Horizon dealer, or (vi) Product not compliant with applicable technical regulations, or (vii) use that violates any applicable laws, rules, or regulations OTHER THAN THE EXPRESS WARRANTY ABOVE, HORIZON MAKES NO OTHER WARRANTY OR REPRESENTATION, AND HEREBY DISCLAIMS ANY AND ALL IMPLIED WARRANTIES, INCLUDING, WITHOUT LIMITATION, THE IMPLIED WARRANTIES OF NON-INFRINGEMENT, MERCHANTABILITY AND FITNESS FOR A PARTICULAR PURPOSE. THE PURCHASER ACKNOWLEDGES THAT THEY ALONE HAVE DETERMINED THAT THE PRODUCT WILL SUITABLY MEET THE REQUIREMENTS OF THE PURCHASER'S INTENDED USE.

Purchaser's Remedy – Horizon's sole obligation and purchaser's sole and exclusive remedy shall be that Horizon will, at its option, either (i) service, or (ii) replace, any Product determined by Horizon to be defective. Horizon reserves the right to inspect any and all Product(s) involved in a warranty claim. Service or replacement decisions are at the sole discretion of Horizon. Proof of purchase is required for all warranty claims. SERVICE OR REPLACEMENT AS PROVIDED UNDER THIS WARRANTY IS THE PURCHASER'S SOLE AND EXCLUSIVE REMEDY.

Limitation of Liability – HORIZON SHALL NOT BE LIABLE FOR SPECIAL, INDIRECT, INCIDENTAL OR CONSEQUENTIAL DAMAGES, LOSS OF PROFITS OR PRODUCTION OR COMMERCIAL LOSS IN ANY WAY, REGARDLESS OF WHETHER SUCH CLAIM IS BASED IN CONTRACT, WARRANTY, TORT, NEGLIGENCE, STRICT LIABILITY OR ANY OTHER THEORY OF LIABILITY, EVEN IF HORIZON HAS BEEN ADVISED OF THE POSSIBILITY OF SUCH DAMAGES. Further, in no event shall the liability of Horizon exceed the individual price of the Product on which liability is asserted. As Horizon has no control over use, setup, final assembly, modification or misuse, no liability shall be assumed nor accepted for any resulting damage or injury. By the act of use, setup or assembly, the user accepts all resulting liability. If you as the purchaser or user are not prepared to accept the liability associated with the use of the Product, purchaser is advised to return the Product immediately in new and unused condition to the place of purchase.

Law – These terms are governed by Illinois law (without regard to conflict of law principals). This warranty gives you specific legal rights, and you may also have other rights which vary from state to state. Horizon reserves the right to change or modify this warranty at any time without notice.

WARRANTY SERVICES

Questions, Assistance, and Services – Your local hobby store and/or place of purchase cannot provide warranty support or service. Once assembly, setup or use of the Product has been started, you must contact your local distributor or Horizon directly. This will enable Horizon to better answer your questions and service you in the event that you may need any assistance. For questions or assistance, please visit our website at www.horizonhobby.com, submit a Product Support Inquiry, or call the toll free telephone number referenced in the Warranty and Service Contact Information section to speak with a Product Support representative.

Inspection or Services – If this Product needs to be inspected or serviced and is compliant in the country you live and use the Product in, please use the Horizon Online Service Request submission process found on our website or call Horizon to obtain a Return Merchandise Authorization (RMA) number. Pack the Product securely using a shipping carton. Please note that original boxes may be included, but are not designed to withstand the rigors of shipping without additional protection. Ship via a carrier that provides tracking and insurance for lost or damaged parcels, as Horizon is not responsible for merchandise until it arrives and is accepted at our facility. An Online Service Request is available at http://www.horizonhobby.com/content/_service-center_render-service-center. If you do not have internet access, please contact Horizon Product Support to obtain a RMA number along with instructions for submitting your product for service. When calling Horizon, you will be asked to provide your complete name, street address, email address and phone number where you can be reached during business hours. When sending product into Horizon, please include your RMA number, a list of the included items, and a brief summary of the problem. A copy of your original sales receipt must be included for warranty consideration. Be sure your name, address, and RMA number are clearly written on the outside of the shipping carton.

NOTICE: Do not ship LiPo batteries to Horizon. If you have any issue with a LiPo battery, please contact the appropriate Horizon Product Support office.

Warranty Requirements – For Warranty consideration, you must include your original sales receipt verifying the proof-of-purchase date. Provided warranty conditions have been met, your Product will be serviced or replaced free of charge. Service or replacement decisions are at the sole discretion of Horizon.

Non-Warranty Service – Should your service not be covered by warranty, service will be completed and payment will be required without notification or estimate of the expense unless the expense exceeds 50% of the retail purchase cost. By submitting the item for service you are agreeing to payment of the service without notification. Service estimates are available upon request. You must include this request with your item submitted for service. Non-warranty service estimates will be billed a minimum of ½ hour of labor. In addition you will be billed for return freight. Horizon accepts money orders and cashier's checks, as well as Visa, MasterCard, American Express, and Discover cards. By submitting any item to Horizon for service, you are agreeing to Horizon's Terms and Conditions found on our website http://www.horizonhobby.com/content/service-center_render-service-center.

ATTENTION: Horizon service is limited to Product compliant in the country of use and ownership. If received, a non-compliant Product will not be serviced. Further, the sender will be responsible for arranging return shipment of the un-serviced Product, through a carrier of the sender's choice and at the sender's expense. Horizon will hold non-compliant Product for a period of 60 days from notification, after which it will be discarded.

10/2015

Country of Purchase: United States of America

REPAIRS & REPAIR REQUESTS

Horizon Service Center
1608 Interstate Dr
Champaign, IL 61822 USA

servicecenter.horizonhobby.com/RequestForm/

PRODUCT TECHNICAL ASSISTANCE

Horizon Product Support
1608 Interstate Dr
Champaign, IL 61822 USA

productsupport@horizonhobby.com
877-504-0233

SALES

Horizon Hobby, LLC
1608 Interstate Dr
Champaign, IL 61822 USA

websales@horizonhobby.com
800-338-4639

© 2018 Horizon Hobby, LLC. Tower Hobbies, the Tower Hobbies logo, and Uproar are trademarks or registered trademarks of Horizon Hobby, LLC. All other trademarks, service marks and logos are property of their respective owners.

58755 TOWA2041