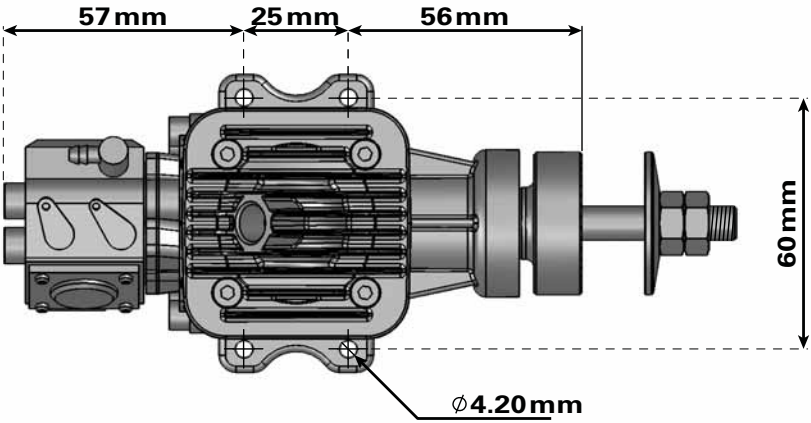
57 mm
25 mm
56 mm
60 mm
∅4.20 mm

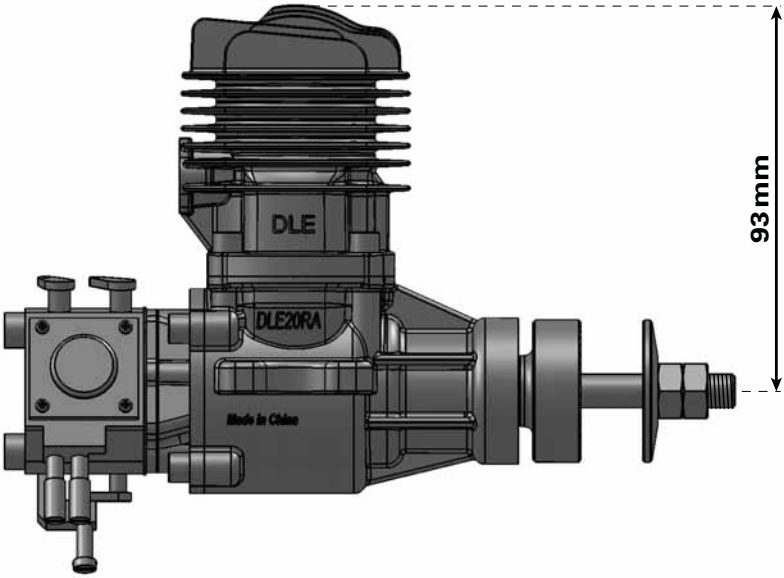
93 mm
DLE
DLE20RA
Made in China