AXIAL®

WWW.AXIALADVENTURE.COM

1/10th SCALE ROCK CRAWLER READY-TO-RUN

SCX10™ III 1987 TOYOTA SR5



INSTRUCTION MANUAL
BEDIENUNGSANLEITUNG
MANUEL D'UTILISATION
MANUALE DI ISTRUZIONI

RTR
READY-TO-RUN

Scan the QR code and select the Support tab from the product page for the most up-to-date manual information.
Scannen Sie den QR-Code und wählen Sie auf der Produktseite die Registerkarte „Support", um die aktuellsten Informationen zu Handbücher.
Scannez le code QR et sélectionnez l'onglet Support sur la page du produit pour obtenir les informations les plus récentes sur le manuel.
Scannerizzare il codice QR e selezionare la scheda Supporto dalla pagina del prodotto per le informazioni manuali più aggiornate.

AXI-2062

HORIZON® HOBBY

1160103.1
Updated 12/25

NOTICE

All instructions, warranties and other collateral documents are subject to change at the sole discretion of Horizon Hobby, LLC. For up-to-date product literature, visit horizonhobby.com or towerhobbies.com and click on the support or resources tab for this product.

MEANING OF SPECIAL LANGUAGE

The following terms are used throughout the product literature to indicate various levels of potential harm when operating this product:

WARNING: Procedures, which if not properly followed, create the probability of property damage, collateral damage, and serious injury OR create a high probability of superficial injury.

CAUTION: Procedures, which if not properly followed, create the probability of physical property damage AND a possibility of serious injury.

NOTICE: Procedures, which if not properly followed, create a possibility of physical property damage AND a little or no possibility of injury.

⚠ **WARNING:** Read the ENTIRE instruction manual to become familiar with the features of the product before operating. Failure to operate the product correctly can result in damage to the product, personal property and cause serious injury.

This is a sophisticated hobby product. It must be operated with caution and common sense and requires some basic mechanical ability. Failure to operate this Product in a safe and responsible manner could result in injury or damage to the product or other property. This product is not intended for use by children without direct adult supervision. Do not use with incompatible components or alter this product in any way outside of the instructions provided by Horizon Hobby, LLC. This manual contains instructions for safety, operation and maintenance. It is essential to read and follow all the instructions and warnings in the manual, prior to assembly, setup or use, in order to operate correctly and avoid damage or serious injury.

Age Recommendation: Not for children under 14 years. This is not a toy.

SAFETY PRECAUTIONS AND WARNINGS

As the user of this product, you are solely responsible for operating in a manner that does not endanger yourself and others or result in damage to the product or property of others.

This model is controlled by a radio signal subject to interference from many sources outside your control. This interference can cause momentary loss of control, so it is advisable to always keep a safe distance in all directions around your model as this margin will help avoid collisions or injury.

- Never operate your model with low transmitter batteries.
- Always operate your model in open spaces away from full-size vehicles, traffic and people.
- Never operate the model in the street or in populated areas for any reason.
- Carefully follow the directions and warnings for this and any optional support equipment (chargers, rechargeable battery packs, etc.) you use.
- Keep all chemicals, small parts and anything electrical out of the reach of children.
- Never lick or place any portion of the model in your mouth as it could cause serious injury or even death.
- Exercise caution when using tools and sharp instruments.
- Take care during maintenance as some parts may have sharp edges.
- Immediately after using your model, do NOT touch equipment such as the motor, electronic speed control and battery, because they generate high temperatures. You may burn yourself seriously touching them.
- Do not put fingers or any objects inside rotating and moving parts, as this may cause damage or serious injury.
- Always turn on your transmitter before you turn on the receiver in the car. Always turn off the receiver before turning your transmitter off.
- Keep the wheels of the model off the ground when checking the operation of the radio equipment.

⚠ **WARNING AGAINST COUNTERFEIT PRODUCTS:** Always purchase from a Horizon Hobby, LLC authorized dealer to ensure authentic high-quality Spektrum product. Horizon Hobby, LLC disclaims all support and warranty with regards, but not limited to, compatibility and performance of counterfeit products or products claiming compatibility with DSM® or Spektrum technology.

TABLE OF CONTENTS

Safety Precautions and Warnings 2
Water-Resistant Vehicle with Waterproof Electronics 3
Box Contents 4
Required Equipment 4
Recommended Tools 4
Getting Started Checklist 5
Vehicle Parts 5
Charge the Vehicle Battery 6
Install the Transmitter Batteries 6
Transmitter Functions 6
SPMSR515 Dual Protocol Receiver 7
Adjusting the Vehicle Battery Tray 7
Dig Programming Procedure 7
Install the Vehicle Battery 8
Binding 8
Range-Checking the Radio System 9
Vehicle Maintenance 9
Firma 40A Brushed ESC 10
Gear Ratios 10
Troubleshooting 11
Limited Warranty 12
Warranty and Service Contact Information 12
FCC Information 13
IC Information 13
Compliance Information for the European Union 13
Parts Lists 56–59
Electronics 59
Exploded View 50–55

WATER-RESISTANT VEHICLE WITH WATERPROOF ELECTRONICS

Your new Horizon Hobby vehicle has been designed and built with a combination of waterproof and water-resistant components to allow you to operate the product in many "wet conditions," including puddles, creeks, wet grass, snow and even rain.

While the entire vehicle is highly water-resistant, it is not completely waterproof and your vehicle should NOT be treated like a submarine. The various electronic components used in the vehicle, such as the Electronic Speed Control (ESC), servo(s) and receiver are waterproof, however, most of the mechanical components are water-resistant and should not be submerged.

Metal parts, including the bearings, hinge pins, screws and nuts, as well as the contacts in the electrical cables, will be susceptible to corrosion if additional maintenance is not performed after running in wet conditions. To maximize the long-term performance of your vehicle and to keep the warranty intact, the procedures described in the "Wet Conditions Maintenance" section below must be performed regularly if you choose to run in wet conditions. If you are not willing to perform the additional care and maintenance required, then you should not operate the vehicle in those conditions.

⚠ **CAUTION:** Failure to exercise caution while using this product and complying with the following precautions could result in product malfunction and/or void the warranty.

GENERAL PRECAUTIONS

- Read through the wet conditions maintenance procedures and make sure that you have all the tools you will need to properly maintain your vehicle.
- Not all batteries can be used in wet conditions. Consult the battery manufacturer before use. Caution should be taken when using Li-Po batteries in wet conditions.
- Most transmitters are not water-resistant. Consult your transmitter's manual or the manufacturer before operation.
- Never operate your transmitter or vehicle where lightning may be present.
- Do not operate your vehicle where it could come in contact with salt water (ocean water or water on salt-covered roads), contaminated or polluted water. Salt water is very conductive and highly corrosive, so use caution.
- Even minimal water contact can reduce the life of your motor if it has not been certified as water-resistant or waterproof. If the motor becomes excessively wet, apply very light throttle until the water is mostly removed from the motor. Running a wet motor at high speeds may rapidly damage the motor.
- Driving in wet conditions can reduce the life of the motor. The additional resistance of operating in water causes excess strain. Alter the gear ratio by using a smaller pinion or larger spur gear. This will increase torque (and motor life) when running in mud, deeper puddles, or any wet conditions that will increase the load on the motor for an extended period of time.

WET CONDITIONS MAINTENANCE

- Drain any water that has collected in the tires by spinning them at high speed. With the body removed, place the vehicle upside down and pull full throttle for a few short bursts until the water has been removed.

⚠ **CAUTION:** Always keep hands, fingers, tools and any loose or hanging objects away from rotating parts when performing the above drying technique.

- Remove the battery pack(s) and dry the contacts. If you have an air compressor or a can of compressed air, blow out any water that may be inside the recessed connector housing.
- Remove the tires/wheels from the vehicle and gently rinse the mud and dirt off with a garden hose. Avoid rinsing the bearings and transmission.

NOTICE: Never use a pressure washer to clean your vehicle.

- Use an air compressor or a can of compressed air to dry the vehicle and help remove any water that may have gotten into small crevices or corners.
- Spray the bearings, drive train, fasteners and other metal parts with a water-displacing light oil. Do not spray the motor.
- Let the vehicle air dry before you store it. Water (and oil) may continue to drip for a few hours.
- Increase the frequency of disassembly, inspection and lubrication of the following:
  - Front and rear axle hub assembly bearings.
  - All transmission cases, gears and differentials.
  - Motor—clean with an aerosol motor cleaner and re-oil the bushings with lightweight motor oil.

BOX CONTENTS

- Spektrum™ SLT3 3-Channel 2.4GHz Transmitter (SPMRSLT380)
  - (4) AA Alkaline Batteries
- Axial® SCX10™ III 1987 Toyota SR5 1/10 Scale 4WD RTR
  - Axial Slickrock 35T 540 Brushed Motor (AXI-1376)
  - Spektrum™ SR515 DSMR 5-Channel Sport Receiver (SPMSR515)
  - Spektrum™ SX108 Micro Metal Gear Servo (SPMSSX108)
  - Spektrum™ S683 Standard Waterproof Metal Gear Servo 25T (SPMS683)
  - Spektrum™ Firma™ 40A Brushed Waterproof ESC, 2S-3S: IC3 (SPMXSE1040)

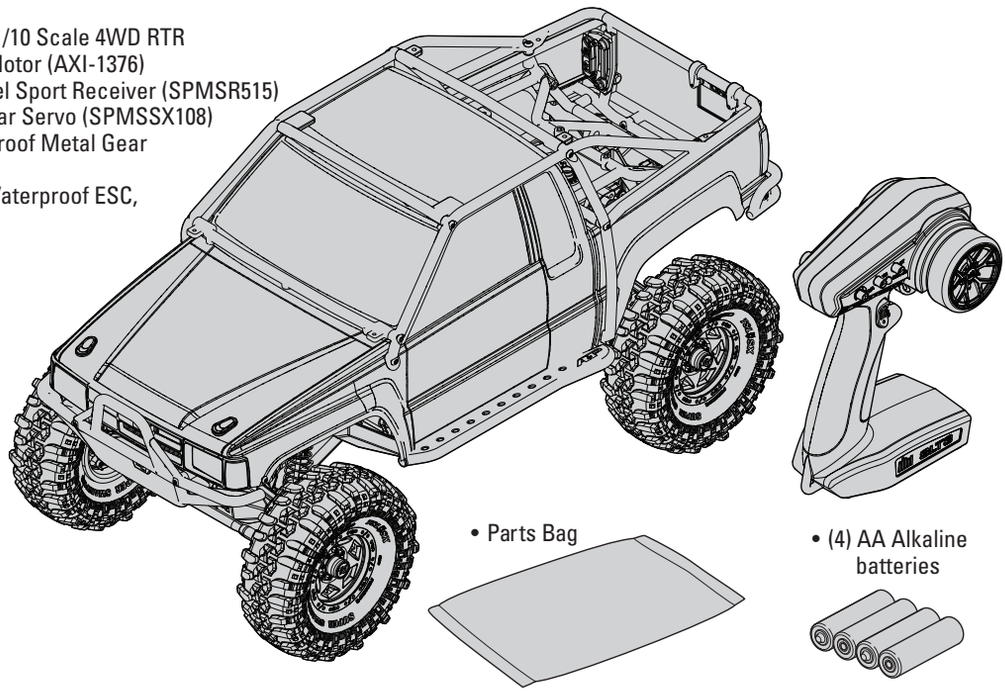

• Parts Bag

• (4) AA Alkaline batteries

REQUIRED EQUIPMENT

• 2–3S LiPo Battery with EC3 or IC3 Connector

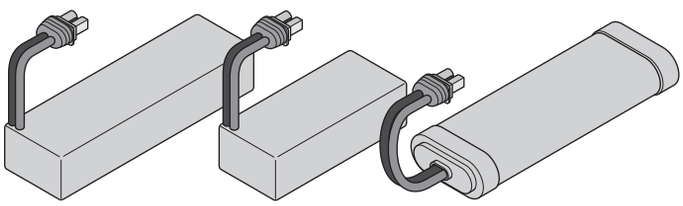

• Battery charger compatible with the chosen vehicle battery type

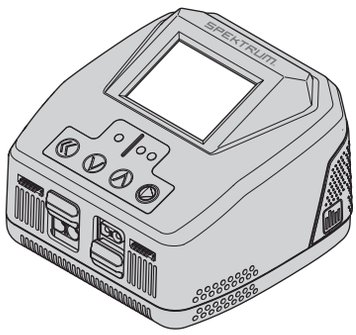

RECOMMENDED TOOLS

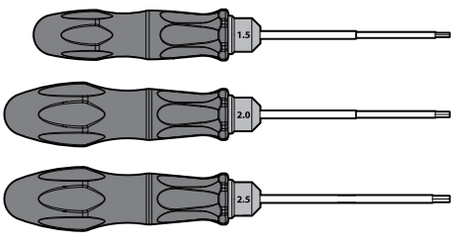

• Hex Drivers (1.5, 2.0, 2.5mm)

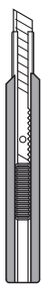

• Hobby Knife

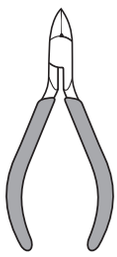

• Side Cutter

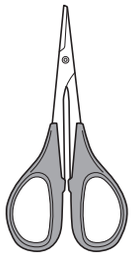

• Curved Scissors

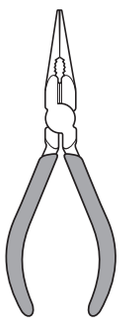

• Long-Nose Plier

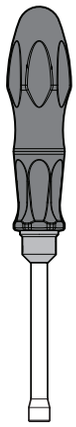

• 7mm Hex Wrench

GETTING STARTED CHECKLIST

	Read the manual
	Familiarize yourself with the vehicle and its components
	Check all screws, especially the driveshaft setscrews, for tightness from the factory
	Charge the vehicle battery
	Install 4 AA batteries in the transmitter

	Power on the transmitter
	Install the vehicle battery in the vehicle
	Check for proper function of the throttle and steering
	Range check the radio system
	Drive the vehicle, challenge yourself and have FUN!
	Perform any necessary vehicle maintenance

VEHICLE PARTS

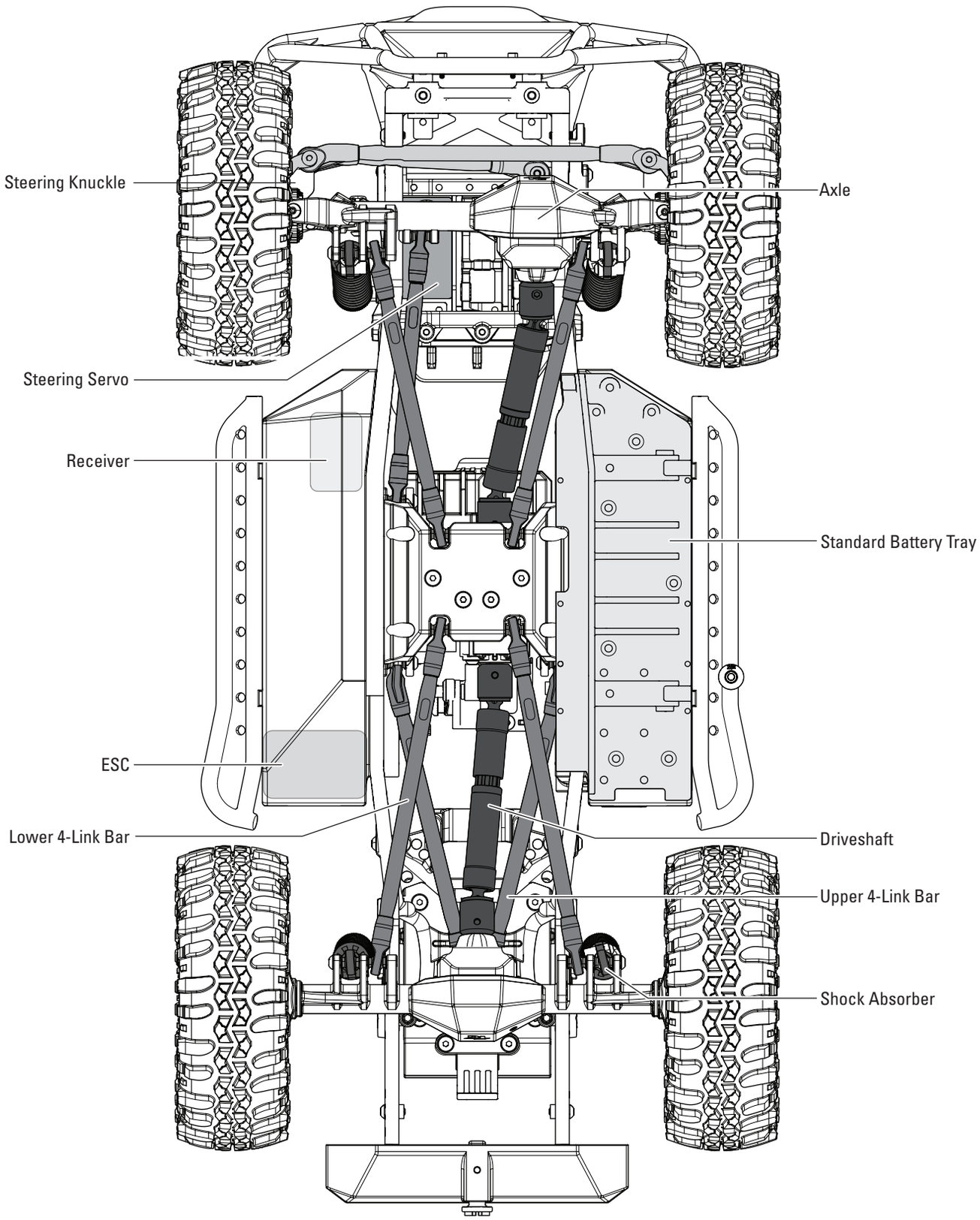

CHARGE THE VEHICLE BATTERY

Follow the charger manufacturer instructions to properly charge the vehicle battery.

CAUTION: Only use chargers designed to charge the chosen battery type. Using an incorrect charger or incorrect charger settings could cause the battery to catch fire or explode.

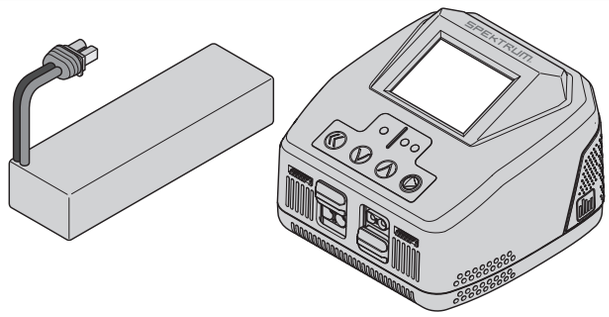

INSTALL THE TRANSMITTER BATTERIES

This transmitter requires 4 AA batteries.

1. Remove the battery cover from the transmitter.
2. Install the batteries as shown.
3. Install the battery cover.

CAUTION: NEVER remove the transmitter batteries while the model is powered on. Loss of model control, damage, or injury may occur.

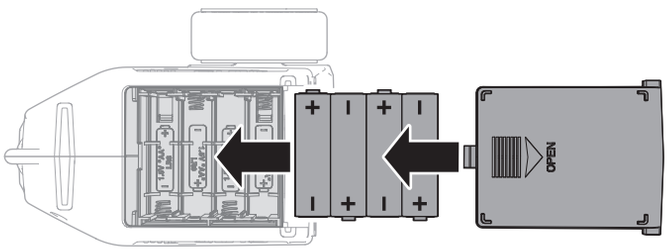

TRANSMITTER FUNCTIONS

SPECIFICATIONS

Power Supply: 4 AA Batteries

Operating Frequency: 2.4GHz

Transmit Power: <100mw

Control Protocol: SLT

Control: Proportional Steering and Throttle/Brake with Trim Knobs, Third Channel with 3 Position Momentary Switch

Auxiliary Functions: 3 Position Throttle Limit Switch, Steering Rate Knob to Change Steering Travel on-the-fly, Programmable Servo Travel for Steering and Throttle/Brake

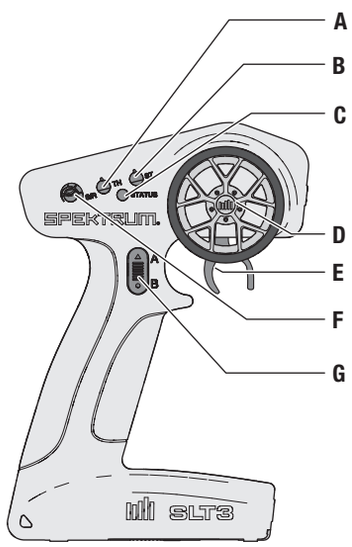

A. Throttle Trim
Adjusts the throttle neutral point.

B. Steering Trim
Adjusts the steering center point. Normally, the steering trim is adjusted until the vehicle tracks straight.

C. LED
- Solid red lights: Indicates the power is ON and adequate battery power.
- Flashing red lights: Indicates the battery voltage is critically low. Replace batteries

D. Steering Wheel

E. Throttle/Brake

F. Steering Rate
On-The-Fly knob for travel adjustment on the steering

G. Channel 3 – A/B Button
3 position momentary switch, middle position is neutral
For DIG function press up for A button, press down for B button.

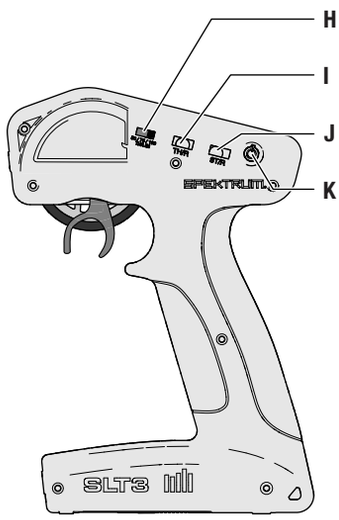

H. Throttle Limit
Limits throttle output to 50/75/100%
Select 50% or 75% for less experienced drivers or when you are driving the vehicle in a small area.

I. Throttle (TH) Servo Reversing
Move the switch to reverse the throttle channel

J. Steering (ST) Servo Reversing
Move the switch to reverse the steering channel

K. Power Button

SPMSR515 DUAL PROTOCOL RECEIVER

SPECIFICATIONS	
Type	Dual Protocol 5-Channel Receiver (SLT/DSMR)
Dimensions (L × W × H)	32.5 x 21.5 x 12.4mm
Antenna Length	120mm
Channels	5
Weight	6g
Band	2.4GHz
Voltage Range	3.5–9.6V
Bind Type	Button

***IMPORTANT:** AUX 3 on the SR515 shares the servo port with the battery. A Y-harness (SPMA3008) is required on the AUX 3 port to use all 5 channels with a receiver battery.

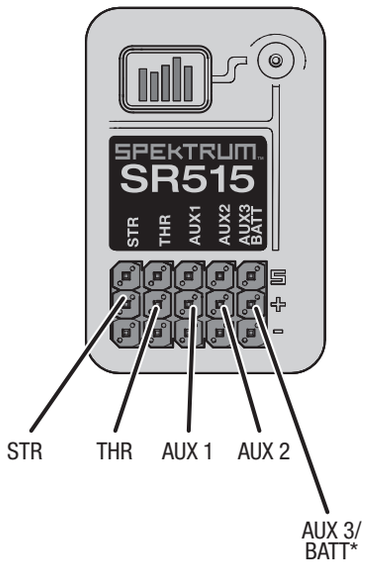

ADJUSTING THE VEHICLE BATTERY TRAY

The battery tray may be adjusted to fit a wide range of battery sizes.

To adjust the battery tray:

1. Remove the six flathead screws from the top of the battery tray, shown in the illustration.
2. Remove the four Philips head screws from the battery tray underside, shown in the illustration.
3. Adjust the battery tray supports to fit the battery.
4. Tighten the screws taking care not to over-tighten them.

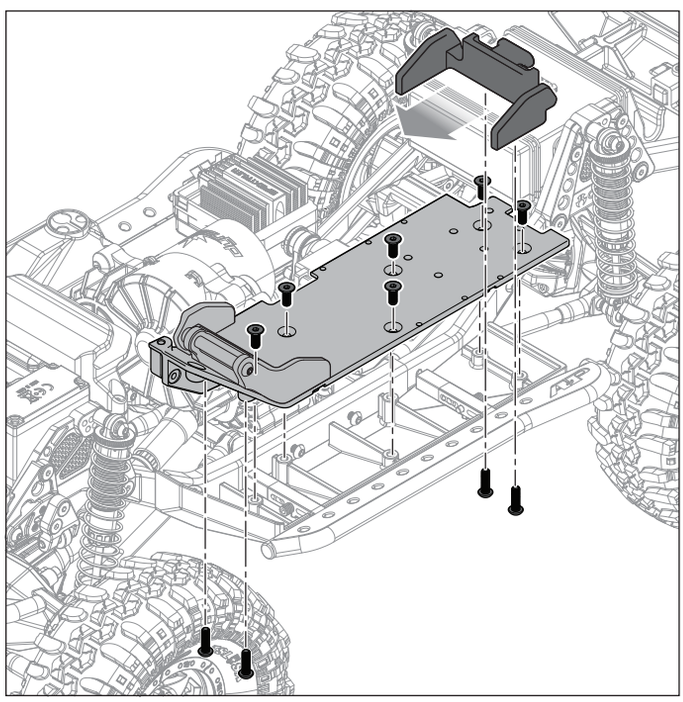

DIG PROGRAMMING PROCEDURE

The vehicle includes a DIG transmission which allows the rear axle to lock while allowing the front wheels to spin. Use this feature in close quarters to turn the vehicle tighter than is possible with normal 4 wheel drive or to preload the suspension when needed.

To enter programming mode:

1. Hold the transmitter trigger at full forward and the transmitter steering wheel full left. Power ON the transmitter.
2. Release the transmitter trigger and steering wheel. The status light will blink every 2 seconds indicating AUX1/DIG programming mode.

To adjust normal 4WD end points:

1. Use the transmitter steering trim knob to set 4WD position. The dig shifting linkage pushes into the transmission.

To adjust the dig end point value:

1. In programming mode, hold down the A or B button.
2. Use the steering rate knob to adjust the end point. The end point is set correctly when the front wheels rotate and the rear wheels are locked.
3. Power OFF the vehicle and transmitter.
4. Reset the steering rate and trim to the default positions.
5. Power ON the transmitter and the vehicle.

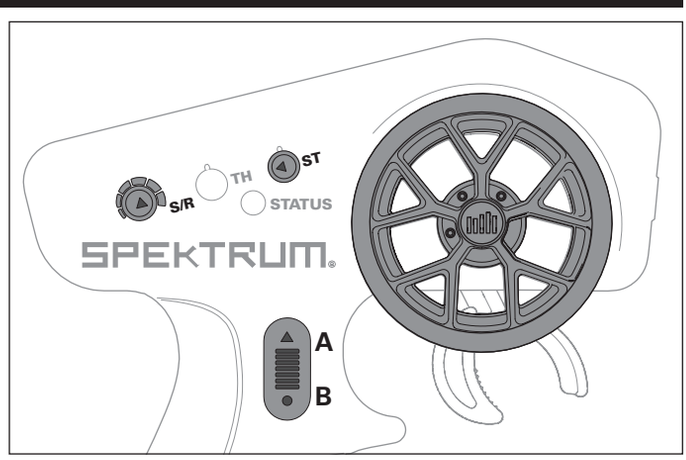

INSTALL THE VEHICLE BATTERY

The following steps show the installation of a standard-size battery in the vehicle's rear battery tray. When using a "shorty"-style battery, install it in the side battery tray.

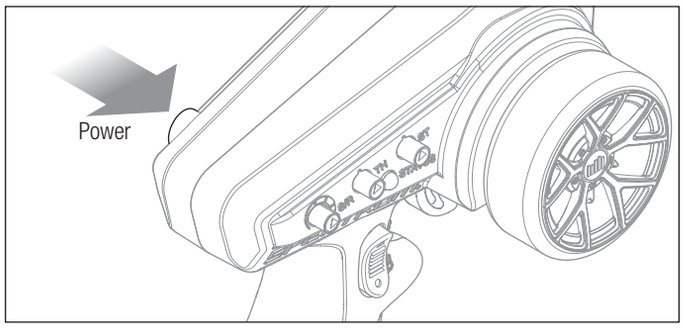

1. Power ON the transmitter.
2. Push the body removal lever.
3. Lift the body from the chassis.
4. Place the battery in the battery tray. Adjust the battery tray length to fit the battery as described in the previous section.

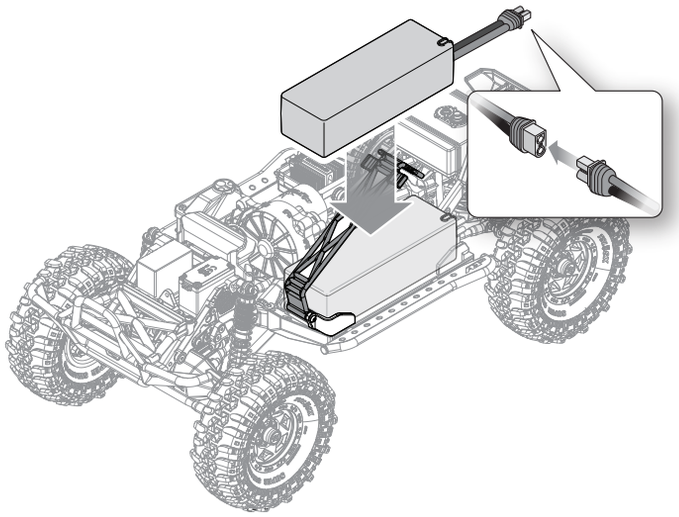

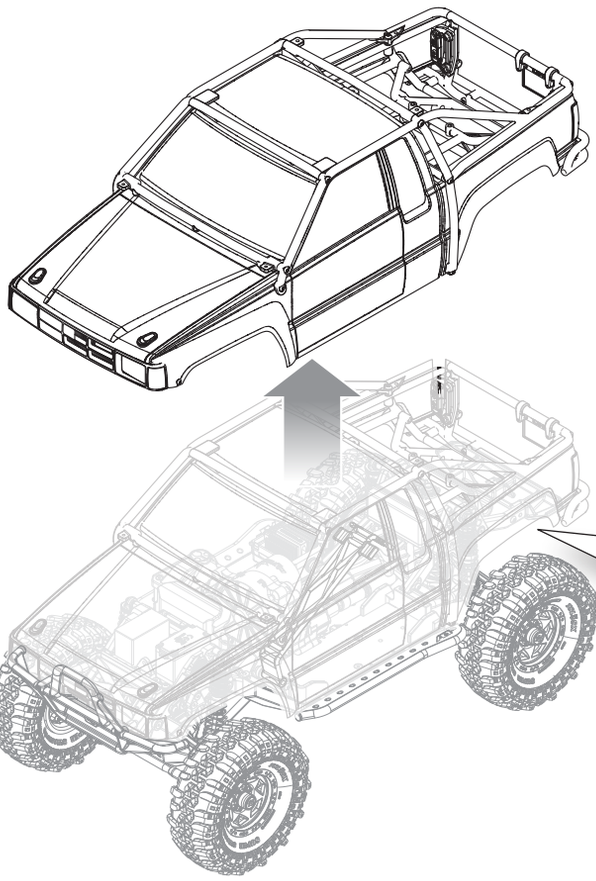

5. Secure the battery to the tray with the elastometer strap.
6. Connect the battery to the ESC.
7. Re-install the body.

NOTICE: Always disconnect the battery from the ESC before powering off the transmitter. Loss of vehicle control may result if it is not properly disconnected.

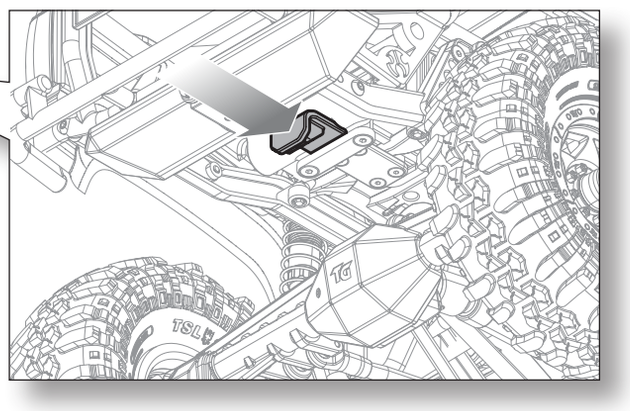

BINDING

Binding is the process of programming the receiver to recognize the GUID (Globally Unique Identifier) code of a single specific transmitter.

1. Power ON the receiver.
2. Press the bind button three times quickly (within 1.5 seconds of the first button press).
   The LED flashes with a pause.
3. Set the trims and control positions at the desired failsafe settings, and power ON the SLT3 transmitter.
4. When the SLT3 transmitter LED and the receiver LED remain lit, binding is complete.

You must rebind when:

- Different failsafe positions are desired (e.g., when throttle or steering reversing has changed).
- Binding the receiver to a different transmitter.

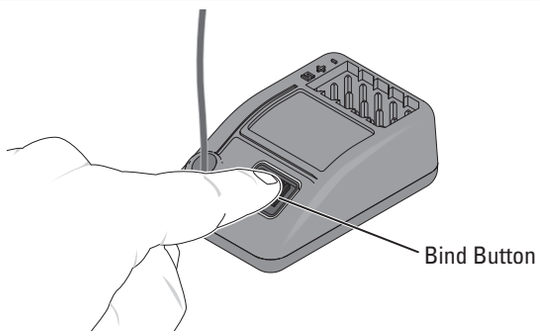

RANGE-CHECKING THE RADIO SYSTEM



Before operating the vehicle, check the radio system to ensure proper operation and adequate range.

1. Turn ON the transmitter.
2. Connect the battery in the vehicle.
3. Have a friend hold the vehicle, and keep hands and loose clothing away from moving parts.
4. Walk away from the vehicle to the maximum planned operating distance.
5. Turn the steering wheel side to side, and operate the throttle, both forward and reverse, checking for any erratic behavior.
6. If any erratic behavior is exhibited, DO NOT operate the vehicle. Call customer service for assistance.



VEHICLE MAINTENANCE

Just like a full-sized car or truck, your RC vehicle must undergo periodic maintenance to ensure peak performance. Preventative maintenance will help avoid needless breakage, which can result in costly repairs. Follow these maintenance suggestions.

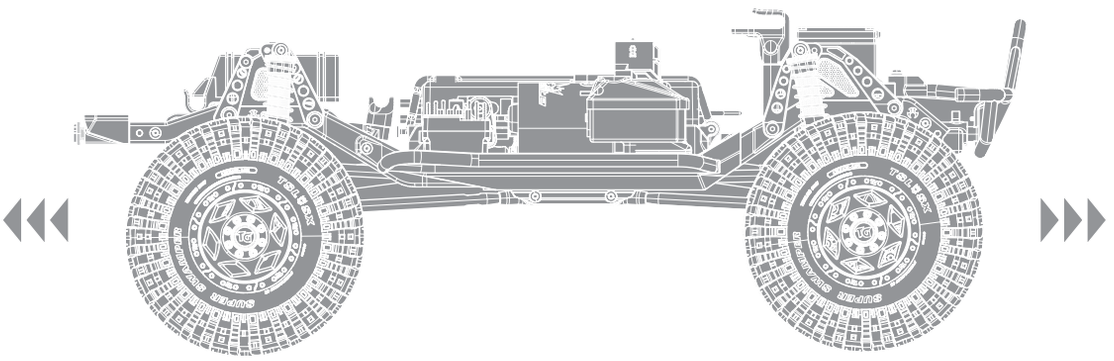

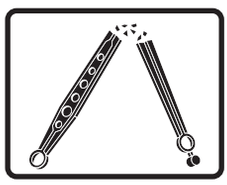

Replace any noticeable bent or broken parts

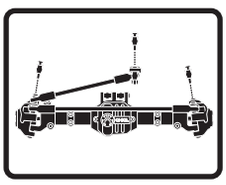

Check for wear on the ball joints in the steering and suspension links (replace if necessary)

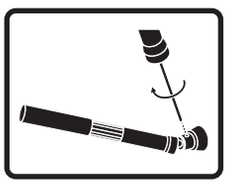

Check the driveshaft set screws and apply thread locking compound when necessary

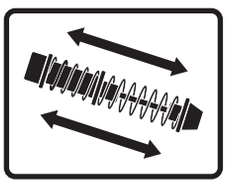

Inspect the shock absorbers for smooth dampened operation

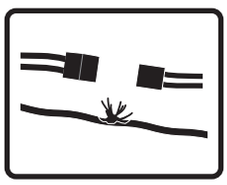

Check for any loose connections or frayed wiring

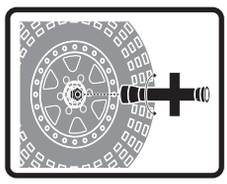

Check the wheel nuts for tightness

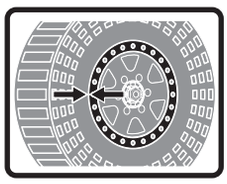

Ensure the wheel beads are still firmly bonded around the entire circumference of the rim

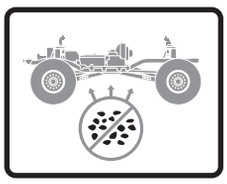

Keep the chassis free of dirt and debris

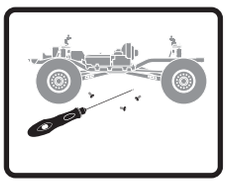

Check for loose screws on the chassis, especially the knuckle, C-hub and axle lockout screws

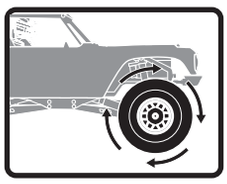

Check the driveline for smooth, bind-free operation

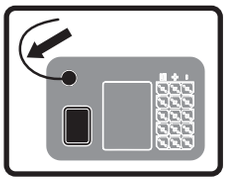

Check the receiver antenna for damage

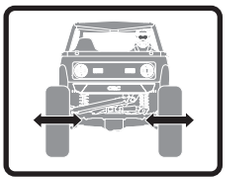

Check the steering operation for any binding

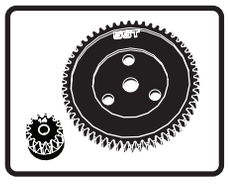

Inspect the spur and pinion gears for damage

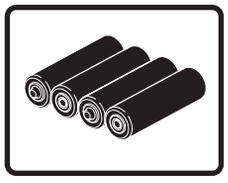

Replace the transmitter batteries when indicated by the transmitter, as described in the Transmitter Functions section

FIRMA 40A BRUSHED ESC

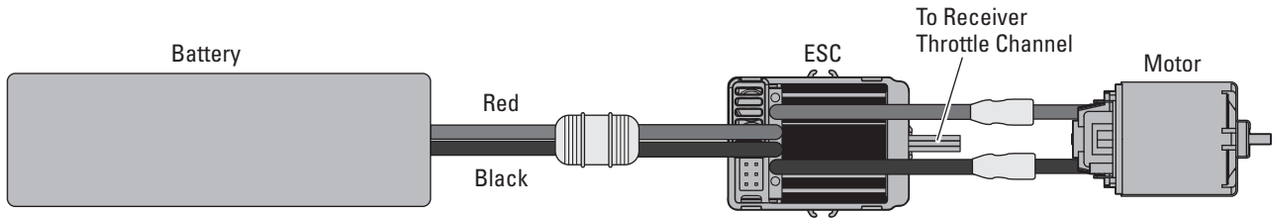

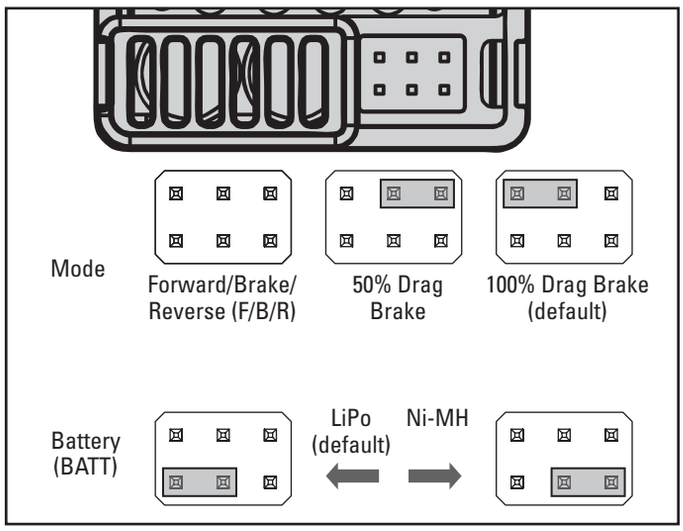

SPECIFICATIONS	
Type	Brushed
Constant/Peak	40A/180A
Resistance	0.002 Ohms
Function	Forward/Brake/Reverse, Forward/Brake, Forward/Reverse (Crawler Mode)
Vehicle Type	1/10 on-road and off-road; 1/10 rock crawler
Operation	Proportional forward, proportional reverse with braking delay, Crawler Mode
Battery Type/ Input Voltage	2–3 cell LiPo/Li-Fe; 5–9 cell Ni-MH/Ni-Cd
Motor Type	2S LiPo down to 12T; 3S LiPo down to 18T
BEC Output	6V/3A
Dimensions	46.5mm x 34mm x 28.5mm (1.8 x 1.3 x 1.1 in)
Weight	70g (2.5 oz)
Battery Connector	IC3™

SETUP

The throttle is calibrated with the included transmitter at the factory. To calibrate the ESC and a different transmitter, follow these steps:

1. Mount the ESC in a well-ventilated area free from vibration and shock.
2. Connect the ESC motor wires to the motor (red-to-red and black-to-black).
3. Connect the ESC throttle wire to the receiver throttle channel.
4. Before plugging the battery into the ESC, verify the transmitter is ON and the throttle trim is set to zero.
5. Connect the battery to the ESC. When the battery is connected, the vehicle powers ON.

⚠ **CAUTION:** Keep all body parts and loose clothing away from any moving parts while the battery is connected to the ESC.

⚠ **CAUTION:** Always connect the ESC to a proper power source that has the correct voltage and polarity. Incorrect voltages or reversed polarity will damage the ESC. Damage to the ESC caused by improper voltage or polarity is not covered under warranty.

6. Use the transmitter to test forward and reverse control.

SOUND INDICATOR	
OPERATION	**SOUND**
Ni-MH/Ni-CD Battery	1 Short Beep
2S LiPo Battery	2 Short Beeps
3S LiPo Battery	3 Short Beeps
ESC Ready	1 Long Beep

TO CALIBRATE THE ESC

1. Power ON the transmitter, and set the throttle control to neutral.
2. Connect the battery to the ESC. Wait 3 seconds to allow the ESC to initiate a self-test and automatic throttle calibration.
   A long beep sounds to indicate the ESC is rcalibrated.
3. Disconnect the battery when the vehicle is not in use.

IMPORTANT: The LiPo cut-off is set to "ON" and the drag brake is set to 100% from the factory.

GEAR RATIOS

SPUR/PINION GEAR RATIO CHART - LCX TRANSMISSION							
	12	**13**	**14** (stock)	**15**	**16**	**17**	**18**
Portal Axles (stock)	55.06	50.83	**47.2**	44.05	41.3	38.87	36.71
Standard Axles (optional)	45.73	42.21	39.2	35.58	34.3	32.28	30.48

TROUBLESHOOTING

PROBLEM	POSSIBLE CAUSE	SOLUTION
The system will not connect	Your transmitter and receiver are too close together	Move transmitter 8–12 feet away from receiver
	You are near metal objects	Move to an area with less metal
	The receiver is bound to a different model memory	Make sure the correct model memory is active in your transmitter
	Your transmitter was placed into bind mode and is no longer bound to your receiver	Rebind your transmitter and receiver, and then re-calibrate
The receiver goes into failsafe a short distance away from the transmitter	Check for damage on the receiver antenna	Make sure your receiver antenna is protected and located as high as practical
		Replace the receiver or contact Horizon Product Support
The receiver stops responding during operation	Low receiver battery voltage. If the battery voltage is low, it may drop below 3.5V momentarily, causing the receiver to brown-out, then reconnect	Charge the receiver or vehicle battery. Spektrum receivers require at least 3.5V to operate
	Loose or damaged wires or connectors between battery and receiver	Check the wires and connection between the battery and receiver. Repair or replace wires and/or connectors
Vehicle does not move	Batteries are not installed properly in the transmitter	Ensure the transmitter batteries are properly installed
	Weak or no battery in the vehicle	Install a freshly charged vehicle battery
	Damaged motor	Replace the motor
	Frayed or broken wiring	Replace any damaged wiring
	ESC is shut down by heat protection circuit	Allow the ESC to cool down completely
Loss of vehicle control	Improper antenna placement	Ensure the transmitter antenna is not blocked and the receiver antenna is located properly
	Weak or no batteries in the transmitter or vehicle	Install a freshly charged vehicle battery and new transmitter batteries
	Neutral or trim position is incorrect	Adjust the steering trim
	Receiver and/or battery not connected properly	Check all receiver and battery connections
Steering and/or throttle function is reversed	Servo travel is reversed at the transmitter	Set the transmitter servo reversing switch to the correct position
	Motor wires are not connected properly	Check all motor wires for correct polarity and secure connection
ESC ON – No motor function, audible tone or LED	Battery/connection issue	Recharge/replace battery. Secure all connections
	Damaged ESC	Repair/replace ESC
	Damaged motor	Repair/replace
Motor – Stops and LED blinks	Low voltage protection	When the ESC LED blinks, recharge/replace battery
	Overheat protection	When the LED blinks, let motor/ESC cool, change set up or gearing to avoid overheating
Motor – Accelerates irregularly	Battery issue	Repair damaged wiring/replace battery
	Incorrect gearing	Adjust/replace gearing
	Worn or damaged motor	Repair/replace motor
Motor – Does not turn continuously in response to throttle	ESC/motor damaged	Repair/replace wiring or motor/ESC
Motor – Slows but will not stop	Incorrect transmitter/ESC calibration	Adjust throttle travel/other throttle settings on the transmitter/ESC. Repeat the ESC Calibration Procedure
Steering servo – Operates; motor does not run	Damaged motor	Test the motor apart from the vehicle system, repair/replace motor as needed
	Incorrect transmitter/ESC calibration	Adjust throttle travel/other throttle settings on the transmitter/ESC. Repeat the ESC Calibration Procedure
Steering/motor – not functioning	Low battery voltage	Recharge/replace
	Wrong model memory selected on transmitter	Select correct model settings on your transmitter, refer to transmitter and/or receiver manual
	Receiver not bound to transmitter	Bind transmitter to receiver, refer to transmitter and/or receiver manual
Vehicle – Does not operate at full speed	Battery issue	Recharge/replace
	Incorrect transmitter/ESC calibration	Adjust throttle travel/other throttle settings on the transmitter/ESC. Repeat the ESC Calibration Procedure

LIMITED WARRANTY

What this Warranty Covers

Horizon Hobby, LLC, (Horizon) warrants to the original purchaser that the product purchased (the "Product") will be free from defects in materials and workmanship for a period of 2 years from the date of purchase.

What is Not Covered

This warranty is not transferable and does not cover (i) cosmetic damage, (ii) damage due to acts of God, accident, misuse, abuse, negligence, commercial use, or due to improper use, installation, operation or maintenance, (iii) modification of or to any part of the Product, (iv) attempted service by anyone other than a Horizon Hobby authorized service center, (v) Product not purchased from an authorized Horizon dealer, or (vi) Product not compliant with applicable technical regulations or (vii) use that violates any applicable laws, rules, or regulations.

OTHER THAN THE EXPRESS WARRANTY ABOVE, HORIZON MAKES NO OTHER WARRANTY OR REPRESENTATION, AND HEREBY DISCLAIMS ANY AND ALL IMPLIED WARRANTIES, INCLUDING, WITHOUT LIMITATION, THE IMPLIED WARRANTIES OF NON-INFRINGEMENT, MERCHANTABILITY AND FITNESS FOR A PARTICULAR PURPOSE. THE PURCHASER ACKNOWLEDGES THAT THEY ALONE HAVE DETERMINED THAT THE PRODUCT WILL SUITABLY MEET THE REQUIREMENTS OF THE PURCHASER'S INTENDED USE.

Purchaser's Remedy

Horizon's sole obligation and purchaser's sole and exclusive remedy shall be that Horizon will, at its option, either (i) service, or (ii) replace, any Product determined by Horizon to be defective. Horizon reserves the right to inspect any and all Product(s) involved in a warranty claim. Service or replacement decisions are at the sole discretion of Horizon. Proof of purchase is required for all warranty claims. SERVICE OR REPLACEMENT AS PROVIDED UNDER THIS WARRANTY IS THE PURCHASER'S SOLE AND EXCLUSIVE REMEDY.

Limitation of Liability

HORIZON SHALL NOT BE LIABLE FOR SPECIAL, INDIRECT, INCIDENTAL OR CONSEQUENTIAL DAMAGES, LOSS OF PROFITS OR PRODUCTION OR COMMERCIAL LOSS IN ANY WAY, REGARDLESS OF WHETHER SUCH CLAIM IS BASED IN CONTRACT, WARRANTY, TORT, NEGLIGENCE, STRICT LIABILITY OR ANY OTHER THEORY OF LIABILITY, EVEN IF HORIZON HAS BEEN ADVISED OF THE POSSIBILITY OF SUCH DAMAGES. Further, in no event shall the liability of Horizon exceed the individual price of the Product on which liability is asserted. As Horizon has no control over use, setup, final assembly, modification or misuse, no liability shall be assumed nor accepted for any resulting damage or injury. By the act of use, setup or assembly, the user accepts all resulting liability. If you as the purchaser or user are not prepared to accept the liability associated with the use of the Product, purchaser is advised to return the Product immediately in new and unused condition to the place of purchase.

Law

These terms are governed by Illinois law (without regard to conflict of law principals). This warranty gives you specific legal rights, and you may also have other rights which vary from state to state. Horizon reserves the right to change or modify this warranty at any time without notice.

WARRANTY SERVICES

Questions, Assistance, and Services

Your local hobby store and/or place of purchase cannot provide warranty support or service. Once assembly, setup or use of the Product has been started, you must contact your local distributor or Horizon directly. This will enable Horizon to better answer your questions and service you in the event that you may need any assistance. For questions or assistance, please visit our website at www.horizonhobby.com, submit a Product Support Inquiry, or call the toll free telephone number referenced in the Warranty and Service Contact Information section to speak with a Product Support representative.

Inspection or Services

If this Product needs to be inspected or serviced and is compliant in the country you live and use the Product in, please use the Horizon Online Service Request submission process found on our website or call Horizon to obtain a Return Merchandise Authorization (RMA) number. Pack the Product securely using a shipping carton. Please note that original boxes may be included, but are not designed to withstand the rigors of shipping without additional protection. Ship via a carrier that provides tracking and insurance for lost or damaged parcels, as Horizon is not responsible for merchandise until it arrives and is accepted at our facility. An Online Service Request is available at http://www.horizonhobby.com/content/service-center_render-service-center. If you do not have internet access, please contact Horizon Product Support to obtain a RMA number along with instructions for submitting your product for service. When calling Horizon, you will be asked to provide your complete name, street address, email address and phone number where you can be reached during business hours. When sending product into Horizon, please include your RMA number, a list of the included items, and a brief summary of the problem. A copy of your original sales receipt must be included for warranty consideration. Be sure your name, address, and RMA number are clearly written on the outside of the shipping carton.

NOTICE: Do not ship Li-Po batteries to Horizon. If you have any issue with a Li-Po battery, please contact the appropriate Horizon Product Support office.

Warranty Requirements

For Warranty consideration, you must include your original sales receipt verifying the proof-of-purchase date. Provided warranty conditions have been met, your Product will be serviced or replaced free of charge. Service or replacement decisions are at the sole discretion of Horizon.

Non-Warranty Service

Should your service not be covered by warranty, service will be completed and payment will be required without notification or estimate of the expense unless the expense exceeds 50% of the retail purchase cost. By submitting the item for service you are agreeing to payment of the service without notification. Service estimates are available upon request. You must include this request with your item submitted for service. Non-warranty service estimates will be billed a minimum of 1/2 hour of labor. In addition you will be billed for return freight. Horizon accepts money orders and cashier's checks, as well as Visa, MasterCard, American Express, and Discover cards. By submitting any item to Horizon for service, you are agreeing to Horizon's Terms and Conditions found on our website http://www.horizonhobby.com/content/service-center_render-service-center.

ATTENTION: Horizon service is limited to Product compliant in the country of use and ownership. If received, a non-compliant Product will not be serviced. Further, the sender will be responsible for arranging return shipment of the un-serviced Product, through a carrier of the sender's choice and at the sender's expense. Horizon will hold non-compliant Product for a period of 60 days from notification, after which it will be discarded.

10/15

WARRANTY AND SERVICE CONTACT INFORMATION

COUNTRY OF PURCHASE	HORIZON HOBBY	CONTACT INFORMATION	ADDRESS
United States of America	Horizon Service Center (Repairs and Repair Requests)	servicecenter.horizonhobby.com/RequestForm/	2904 Research Rd Champaign, IL 61822
	Horizon Product Support (Product Technical Assistance)	productsupport@horizonhobby.com 877-504-0233	
	Sales	websales@horizonhobby.com 800-338-4639	
European Union	Horizon Technischer Service	service@horizonhobby.eu	Hanskampring 9 D 22885 Barsbüttel, Germany
	Sales: Horizon Hobby GmbH	+49 (0) 4121 2655 100	

FCC INFORMATION

FCC ID: BRWSPMSLT300
FCC ID: BRWSRIRVINGV1

SUPPLIER'S DECLARATION OF CONFORMITY
Axial SCX10 III 1987 Toyota SR5 Rock Crawler RTR (AXI-2062)
This device complies with part 15 of the FCC Rules. Operation is subject to the following two conditions: (1) This device may not cause harmful interference, and (2) this device must accept any interference received, including interference that may cause undesired operation.

CAUTION: changes or modifications not expressly approved by the party responsible for compliance could void the user's authority to operate the equipment.

NOTE: This equipment has been tested and found to comply with the limits for a Class B digital device, pursuant to part 15 of the FCC Rules. These limits are designed to provide reasonable protection against harmful interference in a residential installation. This equipment generates, uses and can radiate radio frequency energy and, if not installed and used in accordance with the instructions, may cause harmful interference to radio communications. However, there is no guarantee that interference will not occur in a particular installation. If this equipment does cause harmful interference to radio or television reception, which can be determined by turning the equipment off and on, the user is encouraged to try to correct the interference by one or more of the following measures:

- Reorient or relocate the receiving antenna.
- Increase the separation between the equipment and receiver.
- Connect the equipment into an outlet on a circuit different from that to which the receiver is connected.
- Consult the dealer or an experienced radio/TV technician for help.

Horizon Hobby, LLC
2904 Research Rd.,
Champaign, IL 61822
Email: compliance@horizonhobby.com
Web: HorizonHobby.com

IC INFORMATION

CAN ICES-3 (B)/NMB-3(B)
IC: 6157A-SPMSLT300
IC: 6157A-SRIRVINGV1
This device contains license-exempt transmitter(s)/receivers(s) that comply with Innovation, Science, and Economic Development Canada's license-exempt RSS(s). Operation is subject to the following 2 conditions:

1. This device may not cause interference.
2. This device must accept any interference, including interference that may cause undesired operation of the device.

COMPLIANCE INFORMATION FOR THE EUROPEAN UNION

EU COMPLIANCE STATEMENT:
Axial SCX10 III 1987 Toyota SR5 Rock Crawler RTR (AXI-2062)
Hereby, Horizon Hobby, LLC declares that the device is in compliance with the following: EU Radio Equipment Directive 2014/53/EU; RoHS 2 Directive 2011/65/EU; RoHS 3 Directive - Amending 2011/65/EU Annex II 2015/863.

The full text of the EU declaration of conformity is available at the following internet address: https://www.horizonhobby.com/content/support-render-compliance.

NOTE: This product contains batteries that are covered under the 2006/66/EC European Directive, which cannot be disposed of with normal household waste. Please follow local regulations.

Wireless Frequency Range and Wireless Output Power
Transmitter
2403.0 - 2480.0 MHz
16.3 dBm
Receiver
2404-2476 MHz
-1.33dBm

E328

EU Manufacturer of Record:
Horizon Hobby, LLC
2904 Research Road
Champaign, IL 61822 USA

EU Importer of Record:
Horizon Hobby, GmbH
Hanskampring 9
22885 Barsbüttel Germany

WEEE NOTICE:

This appliance is labeled in accordance with European Directive 2012/19/EU concerning waste of electrical and electronic equipment (WEEE). This label indicates that this product should not be disposed of with household waste. It should be deposited at an appropriate facility to enable recovery and recycling.

EXPLODED VIEWS // EXPLOSIONSZEICHNUNGEN // VUES ÉCLATÉES // VISTE ESPLOSE

FRONT AXLE
VORDERACHSE
ESSIEU AVANT
ASSALE ANTERIORE

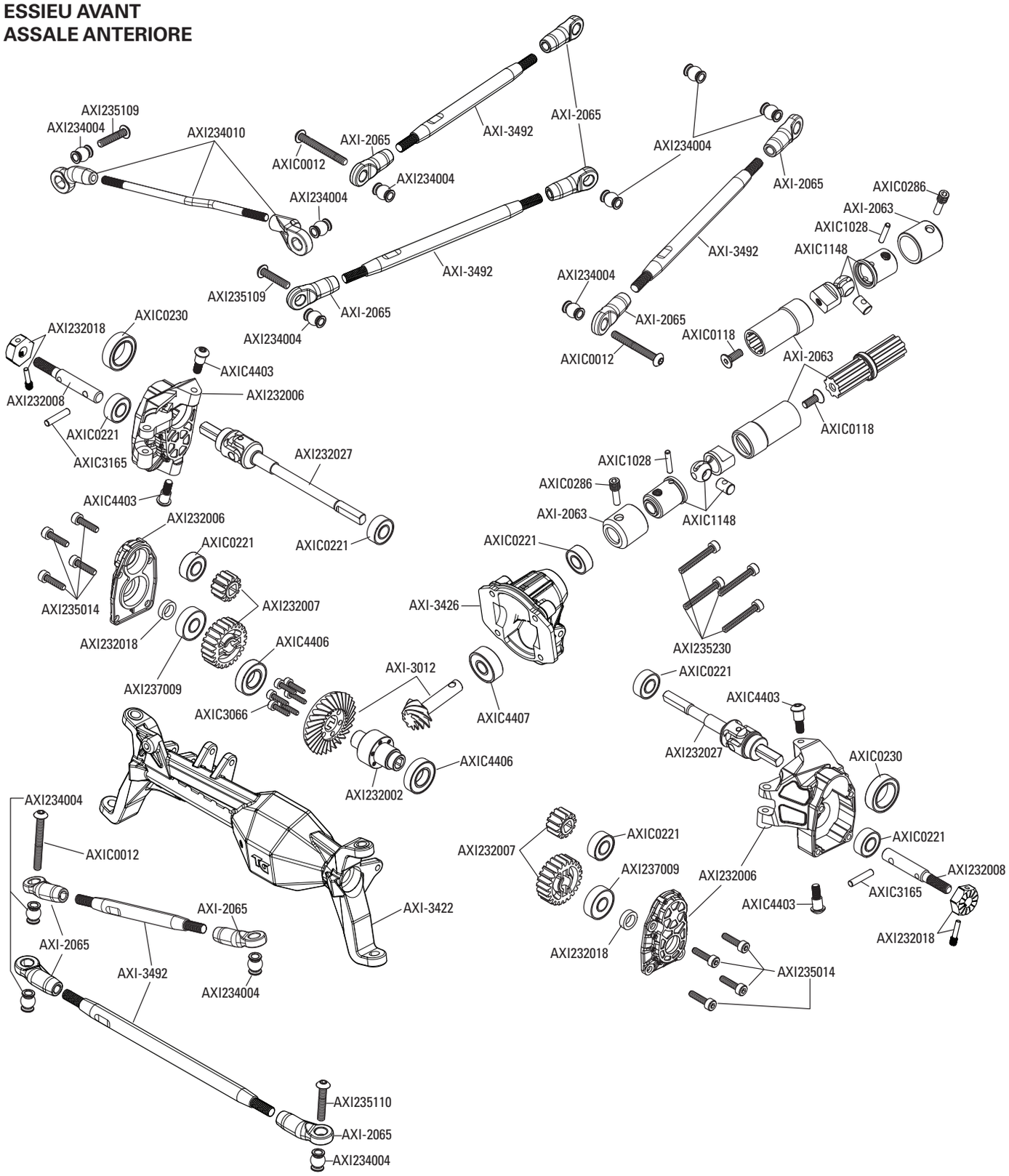

EXPLODED VIEWS // EXPLOSIONSZEICHNUNGEN // VUES ÉCLATÉES // VISTE ESPLOSE

REAR AXLE
HINTERACHSE
ESSIEU ARRIÈRE
ASSALE POSTERIORE

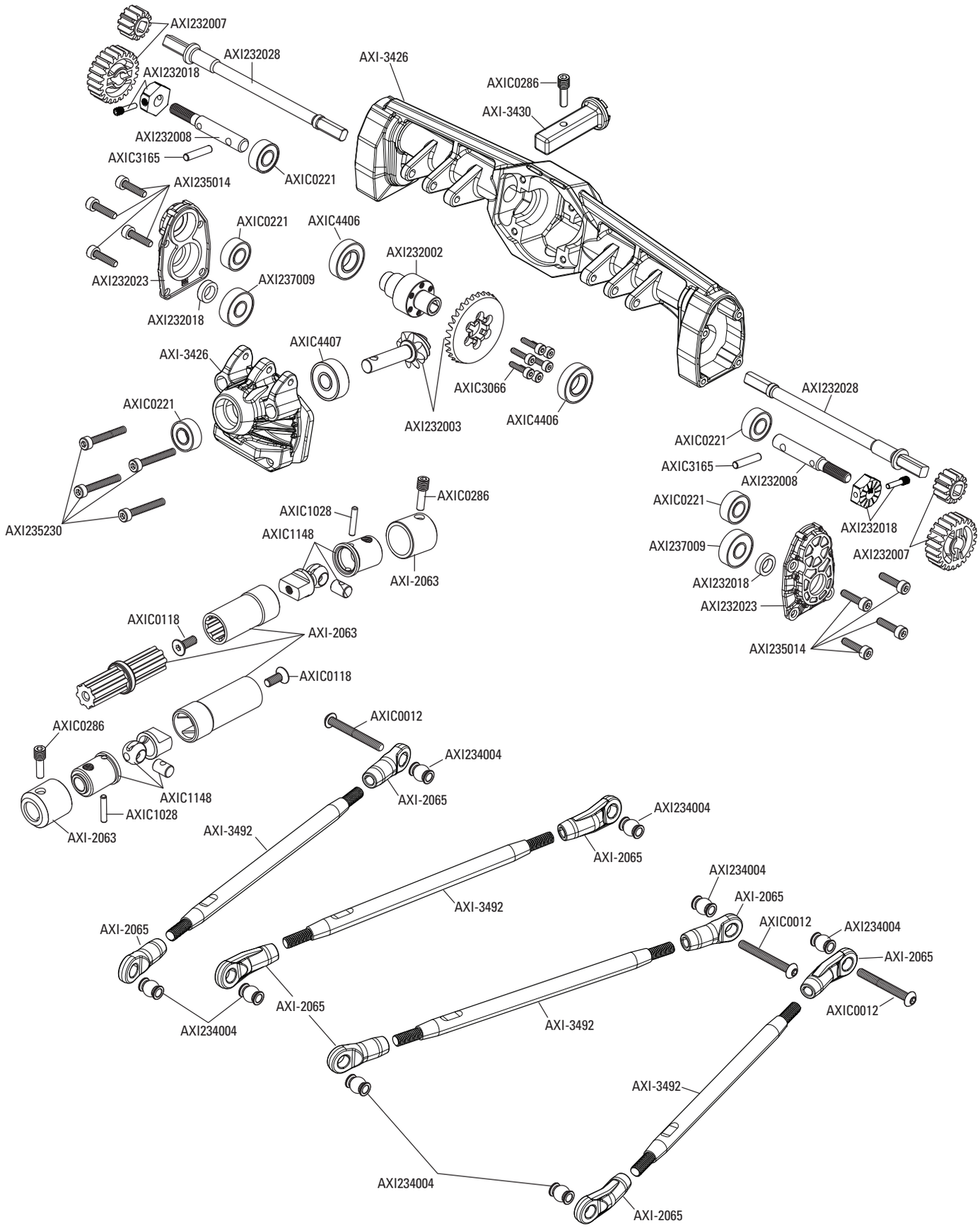

EXPLODED VIEWS // EXPLOSIONSZEICHNUNGEN // VUES ÉCLATÉES // VISTE ESPLOSE

TRANSMISSION
GETRIEBE
TRANSMISSION
TRASMISSIONE

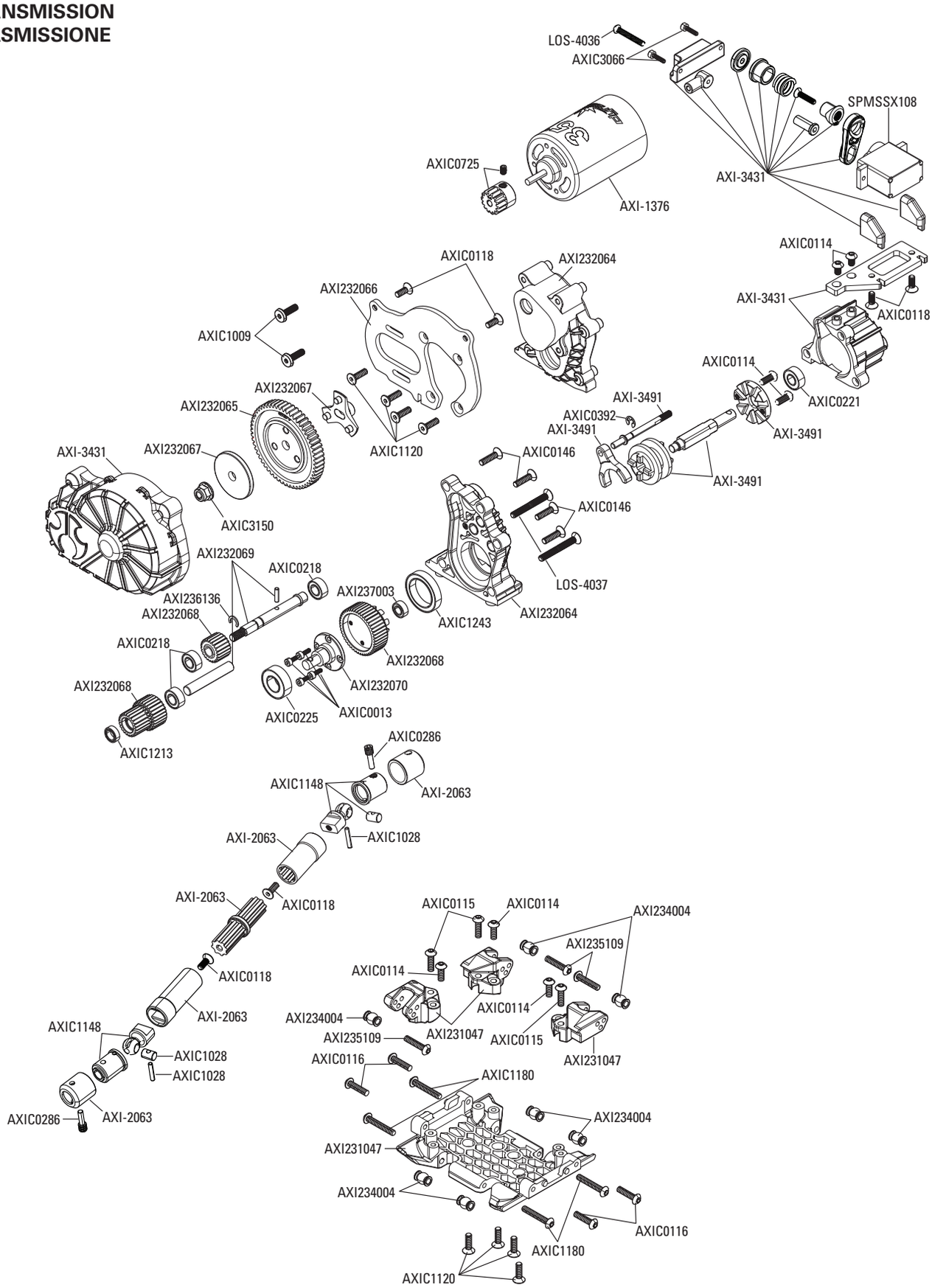

EXPLODED VIEWS // EXPLOSIONSZEICHNUNGEN // VUES ÉCLATÉES // VISTE ESPLOSE

CHASSIS
KAROSSERIE
CHÂSSIS
TELAIO

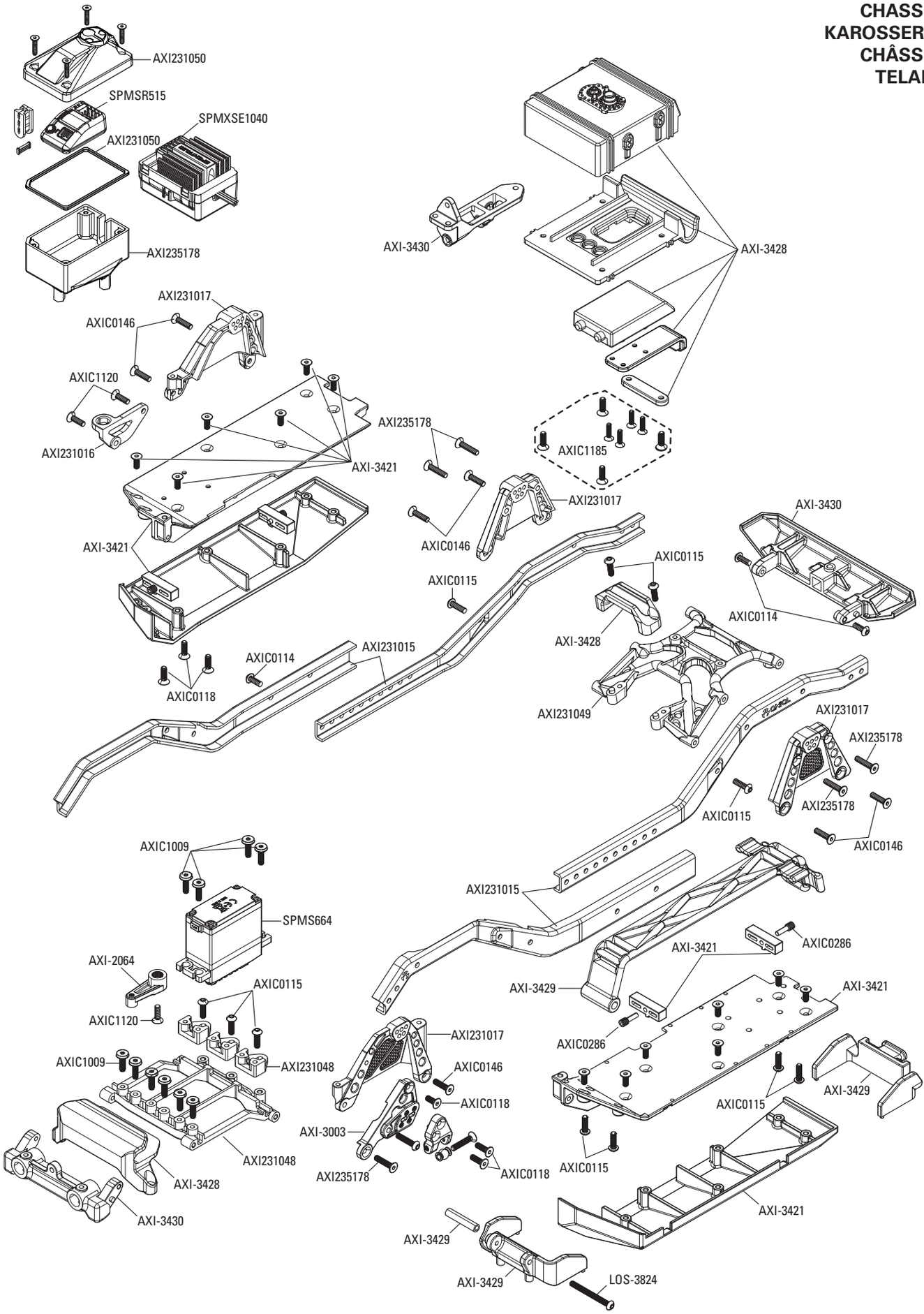

EXPLODED VIEWS // EXPLOSIONSZEICHNUNGEN // VUES ÉCLATÉES // VISTE ESPLOSE

BODY ASSEMBLY
KAROSSERIEMONTAGE
ENSEMBLE DE CARROSSERIE
GRUPPO CARROZZERIA

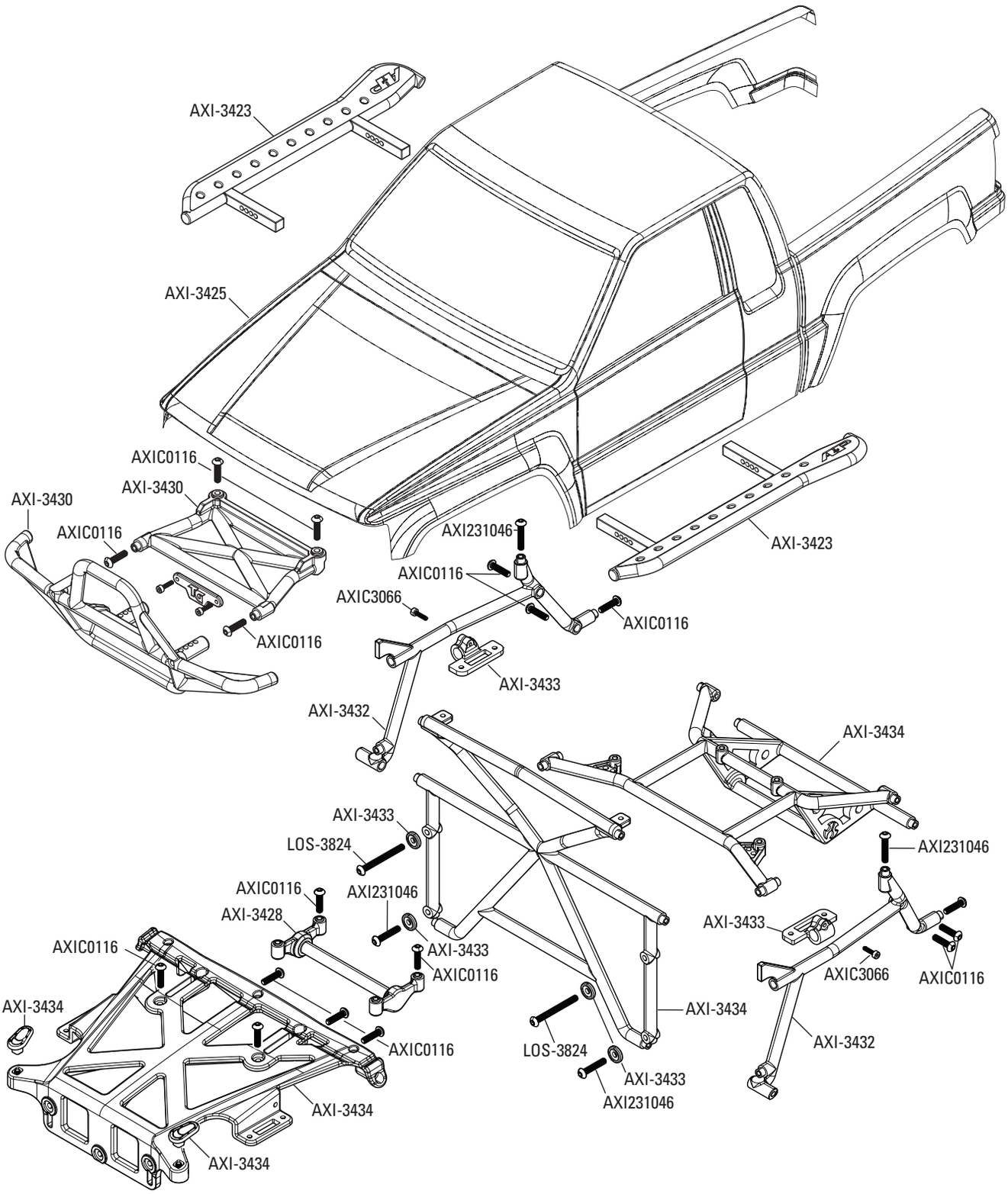

EXPLODED VIEWS // EXPLOSIONSZEICHNUNGEN // VUES ÉCLATÉES // VISTE ESPLOSE

ACCESSORIES
ZUBEHÖR
ACCESSOIRES
ACCESSORI

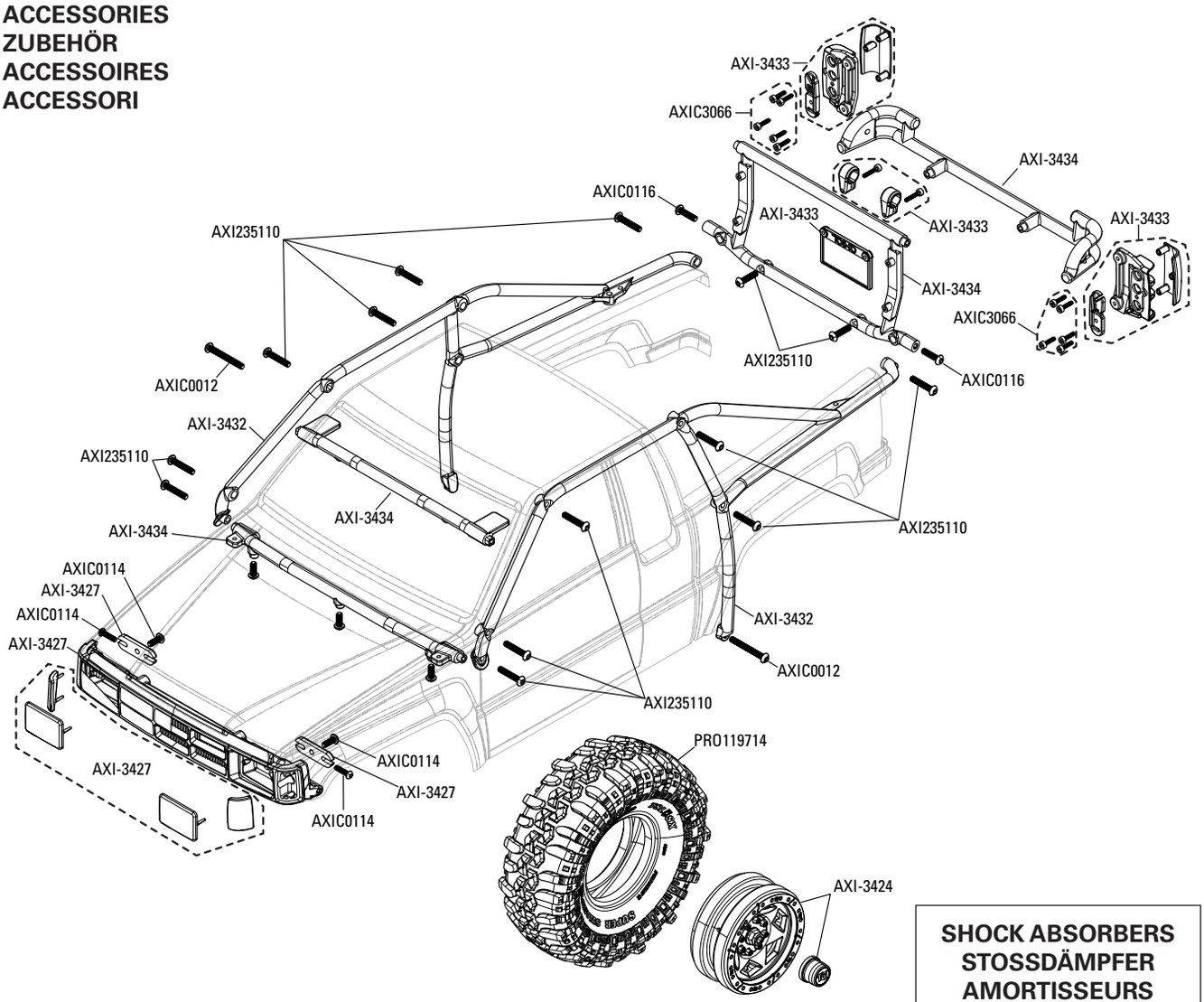

SHOCK ABSORBERS
STOSSDÄMPFER
AMORTISSEURS
AMMORTIZZATORI

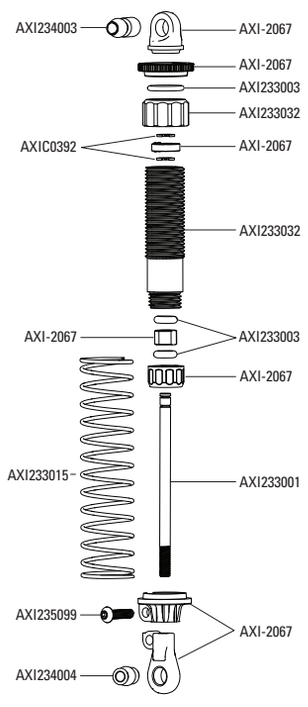

PARTS LISTS // TEILELISTEN // LISTE DES PIÈCES // ELENCO COMPONENTI

Part #	Description	Beschreibung	Description	Descrizione
AXI-1376	35T 540 Brushed Motor	35T 540 Bürstenmotor	Moteur à balais 35T 540	Motore a spazzole 35T 540
AXI-2064	Servo Horn Metal, 25T	Servo-Horn, Metall 25T	Renvoi de commande de servo, métallique, 25T	Squadretta servo metallo, 25T
AXI-2065	HD Rod Ends M4 (20)	HD Stangenkopf M4 (20)	Embouts de bielle HD M4 (20)	Teste a snodo HD M4 (20)
AXI-3003	Adjustable Pan Hard Mount	Verstellbare Panhard-Halterungen	Montage Panhard réglable	Supporto Panhard regolabile
AXI-3012	6-Bolt 27/8 Heavy Duty Overdrive Gear Set	6 Schrauben 27/8 robuster Overdrive-Zahnradsatz	Ensemble d'engrenages de sur-multiplicateur haute résistance 27/8 à 6 boulons	Set ingranaggi overdrive per impieghi gravosi 27/8 a 6 bulloni
AXI-3420	Drive Shaft Molded Parts	Antriebswellen-Formteile	Pièces moulées de l'arbre de transmission	Modanature albero di trasmissione
AXI-3423	Trail Gear Rock Slider Set	Trail Gear Rock-Schieber-Satz	Ensemble de bas de caisse Trail Gear	Set gradini paratelaio Trail Gear
AXI-3424	Trail Gear 1.9 Beadlock Wheel Set (4)	Trail Gear 1.9 Beadlock Reifensatz (4)	Ensemble de roues à verrou 1,9 Trail Gear (4)	Set ruote beadlock Trail Gear 1.9 (4)
AXI-3425	Toyota SR5 Body	Toyota SR5-Gehäuse	Carrosserie Toyota SR5	Carrozzeria Toyota SR5
AXI-3426	Trail Gear AR45P Rear Axle Housing	Trail Gear AR45P Hinterachsgehäuse	Carter d'essieu arrière AR45P Trail Gear	Alloggiamento assale posteriore Trail Gear AR45P
AXI-3427	Grill & Molded Lens Set	Kühlergrill und geformter Linsensatz	Ensemble grille et lentille moulée	Set griglia e lenti sagomate
AXI-3428	Clipless Body Mounting System	Gehäusemontagesystem ohne Clip	Système de montage de carrosserie sans attache	Sistema montaggio carrozzeria senza clip
AXI-3429	Battery Tray Set	Akkufach-Satz	Ensemble de support de batterie	Set vassoio batteria
AXI-3430	F/R Bumper Set	F/R-Stoßstangen-Satz	Ensemble de pare-chocs A/A	Set paraurti Av./Ind.
AXI-3431	LCXU Transmission Case & Dig Parts	LCXU-Getriebeabdeckung und Dig-Teile	Boîtier de transmission et pièces dig LCXU	Scatola trasmissione e parti Dig LCXU
AXI-3432	Molded Cage Sides Set	Geformter Käfigseiten-Satz	Ensemble de côtés de cage moulés	Set lati sagomati gabbia
AXI-3433	Molded Cage Accessories	Zubehör für geformten Käfig	Accessoires de cage moulée	Accessori sagomati per gabbia
AXI-3434	Molded Cage Parts	Teile für geformten Käfig	Pièces de cage moulée	Parti sagomate gabbia
AXI-3474	LED Light Set	LED-Licht-Satz	Ensemble d'éclairage DEL	Set luci LED
AXI-3491	LCXU Dig Internals V2	LCXU Dig Interna V2	Pièces internes dig LCXU V2	LCXU Dig Internals V2
AXI-3492	F/R Link Set	F/R-Verbindungssatz	Ensemble de liens A/A	Set leveraggi Av./Ind.
AXI70000	Axial Foam Pit Mat, 24" x 48"	Axiale Schaumstoff-Boxenmatte, 24"x 48"	Pit mat en mousse Axial, 24 po x 48 po	Tappetino in schiuma Axial, 24"x 48"
AXI230048	Body Post Set	Gehäusestangensatz	Ensemble poteaux carrosserie	Kit supporti scocca
AXI232002	AR44 6-Bolt Differential Locker	AR44 6-Schrauben-Differenzial-Sicherung	Blocage différentiel à 6 boulons AR44	Blocco differenziale 6 bulloni AR44
AXI232003	6-Bolt 30 8 Heavy Duty Gear Set	6 Schrauben 30 8 robuster Zahnradsatz	Ensemble d'engrenages haute résistance 30/8 à 6 boulons	Set ingranaggio impieghi gravosi 6 bulloni 30 8
AXI232006	Currie F9 Portal Steering Knuckle Caps	Currie F9 Portal-Achsschenkel und -abdeckung	Rotule de direction et coiffe du portique Currie F9	Tappi fuso a snodo Currie F9 Portal
AXI232007	32P Portal Gear Set, 23T/12T (2 pieces each)	32P Portalachssatz, 23T/12T (jeweils 2 Stck)	Ensemble d'engrenages de portique 32P 23T/12T (2 pièces chacun)	Set ingranaggi Portal 32P, 23T/12T (2 pezzi ciascuno)
AXI232008	Portal Stub Axle (2)	Portalachsschenkel (2)	Demi-essieu du portique (2)	Fusello Portal (2)
AXI232018	12mm Hex Screw Shaft & Spacer (4)	12-mm-Sechskant-Gewindeschaft und Abstandhalter (4)	Tige de vis hexagonale 12 mm et entretoise (4)	Distanziale e perno a vite esagonale 12 mm (4)
AXI232027	AR45P Universal Axle Set (2)	AR45P Universalachsensatz (2)	Ensemble essieu universel AR45P (2)	Set assale universale AR45P (2)
AXI232028	AR45P Straight Axle Shaft (2)	AR45P Gerade Achswelle (2)	Arbre d'essieu droit AR45P (2)	Set assale dritto AR45P (2)
AXI232064	Gear Cover & Transmission Housings	Fahrwerkabdeckung und Getriebegehäuse	Cache d'engrenage et boîtes de transmission	Carter ingranaggi e alloggiamenti trasmissione
AXI232066	Motor Plate	Motorplatte	Plaque moteur	Piastra motore
AXI232067	Slipper Eliminator Hub & Plate	Gleiter-Eliminator-Nabe und -Platte	Moyeu et plaque de sabot éliminateur	Piastra e mozzo sostitutivi della frizione antisaltellamento
AXI232068	Transmission Metal Gear Set	Metallgetriebesatz	Ensemble de boîte de transmission métallique	Set ingranaggio in metallo trasmissione
AXI232069	Transmission Shaft Set	Getriebewellensatz	Ensemble d'arbre de transmission	Set albero trasmissione
AXI232070	Transmission Center Output Shaft	Getriebe-Mittelantriebswelle	Arbre de sortie de transmission centrale	Albero di uscita centrale della trasmissione

Part #	Description	Beschreibung	Description	Descrizione
AXI233003	Shock O-Ring Set	O-Ring-Satz für den Stoßdämpfer	Ensemble joint torique d'amortisseur	Set O-ring ammortizzatori
AXI233036	Shock Set Complete (2)	Stoßdämpfersatz, komplett (2)	Ensemble amortisseur complet (2)	Set ammortizzatori completo (2)
AXI234003	Pivot Ball, Stainless Steel 12.75mm (4)	Kugelzapfen, Edelstahl 12,75 mm (4)	Rotule, acier inoxydable 12,75 mm (4)	Pivot ball, acciaio inox, 12,75 mm (4)
AXI234004	Suspension Pivot Ball, Stainless Steel 7.5mm (10)	Kugelzapfen für Federung, Edelstahl 7,5 mm (10)	Rotule de suspension, acier inoxydable 7,5 mm (10)	Pivot ball sospensioni, acciaio inox 7,5 mm (10)
AXI235014	Cap Head Screw M2.5x10mm (10)	Inbusschraube, M2,5 x 10 mm (10)	Vis d'assemblage creuse, M2,5 x 10 mm (10)	Vite a testa cilindrica M2.5x10 mm (10)
AXI235109	Button Head Screw M3x14mm (10)	Rundkopfschraube, M3 x 14 mm (10)	Vis à tête bombée, M3 x 14 mm (10)	Vite a testa tonda M3x14 mm (10)
AXI235110	Button Head Screw M3x16mm (10)	Rundkopfschraube, M3 x 16 mm (10)	Vis à tête bombée, M3 x 16 mm (10)	Vite a testa tonda M3x16 mm (10)
AXI235178	Flat Head Screw M3x14mm (10)	Flachkopfschraube M3 x 14 mm (10)	Vis à tête plate, M3 x 14 mm (10)	Vite a testa svasata M3x14 mm (10)
AXI235230	Cap Head Screw M2.5x18mm (10)	Inbusschraube M2,5 x 18 mm (10)	Vis d'assemblage creuse, M2,5 x 18 mm (10)	Vite a testa cilindrica M2.5x18 mm (10)
AXI236136	C-Clip, 5mm (10)	C-Clips, 5 mm (10)	Clip en C, 5 mm (10)	C-clip, 5 mm (10)
AXI236172	Screw Shaft M3x2.0x12mm	Schraubenschaft M3 x 2,0 x 12 mm	Tige de vis M3 x 2 x 12 mm	Albero filettato M3x2x12mm
AXI237009	Ball Bearing 5x13x4mm (2)	Kugellager 5 x 13 x 4 mm (2)	Roulement à billes 5 x 13 x 4 mm (2)	Cuscinetto a sfera 5x13x4 mm (2)
AXI238001	Dig Conversion Kit	Dig Umrüstsatz	Kit de conversion Dig	Kit conversione DIG
AXIC0012	Hex Socket Button Head Screw M3x25mm, Black (10)	M3 x 25 mm Sechskant-Rundkopfschraube, Schwarz (10)	Vis à tête bombée creuse hexagonale M3 x 25 mm, noire (10)	Vite a testa bombata cava esagonale M3x25 mm, Nero (10)
AXIC0114	Hex Socket Button Head M3x8mm, Black Oxide (10)	M3 x 8 mm Sechskant-Rundkopf, Schwarzoxid (10)	Douille à six pans à tête bombée M3 x 8 mm, brunie (10)	Vite a testa bombata cava esagonale M3x8 mm, Nero ossido (10)
AXIC0115	Hex Socket Button Head M3x10mm, Black (10)	M3 x 10 mm Sechskant-Rundkopf Schwarz (10)	Douille à six pans à tête bombée M3 x 10 mm, noire (10)	Vite a testa bombata cava esagonale M3x10 mm, Nero (10)
AXIC0116	Hex Socket Button Head M3x12mm, Black (10)	M3 x 12 mm Sechskant-Rundkopf, Schwarz (10)	Douille à six pans à tête bombée M3 x 12 mm, noire (10)	Vite a testa bombata cava esagonale M3x12 mm, Nero (10)
AXIC0118	Hex Flat Head Screw M3X8mm, Black (10)	Sechskant-Flachkopfschraube M3 x 8 mm Schwarz (10)	Vis à tête plate hexagonale M3 x 8 mm, noire (10)	Vite a testa svasata cava esagonale M3x8 mm, Nero (10)
AXIC0146	Hex Socket Flat Head Screw M3x12mm, Black (10)	M3 x 12 mm Sechskant-Flachkopfschraube, Schwarz (10)	Vis à tête plate creuse hexagonale M3 x 12 mm, noire (10)	Vite a testa svasata cava esagonale M3x12 mm, Nero (10)
AXIC0147	Hex Socket Flat Head Screw M3x16mm, Black (10)	M3 x 16 mm Sechskant-Flachkopfschraube, Schwarz (10)	Douille à six pans à tête plate M3 x 16 mm, noire (10)	Vite a testa svasata cava esagonale M3x16 mm, Nero (10)
AXIC0181	Set Screw M3x4mm, Black (10)	Feststellschraubew M3x4mm Schwarz (10)	Vis de fixation M3 x 4 mm, noire (10)	Vite di fermo M3x4mm, Nero (10)
AXIC0218	Bearing 5x10x4mm (2)	Lager 5 x 10 x 4 mm (2)	Roulement 5 x 10 x 4 mm (2)	Cuscinetti 5x10x4 mm (2)
AXIC0221	Bearing 5x11x4mm (2)	Lager 5 x 11 x 4 mm (2)	Roulement 5 x 11 x 4 mm (2)	Cuscinetto 5x11x4 mm (2)
AXIC0225	Bearing 8x16x5mm (2)	Lager 8 x 16 x 5 mm (2)	Roulement 8 x 16 x 5 mm (2)	Cuscinetto 8x16x5 mm (2)
AXIC0230	Bearing 10x15x4mm	Lager 10 x 15 x 4 mm	Roulement 10 x 15 x 4 mm	Cuscinetto 10x15x4 mm
AXIC0286	Screw Shaft M4x2.5x12mm (6)	Schraubenschaft M4 x 2,5 x 12 mm (6)	Tige de vis M4 x 2,5 x 12 mm (6)	Albero filettato M4x2.5x12 mm (6)
AXIC0392	E-Clip E2 (10)	E-Clip E2 (10)	Attache en E E2 (10)	E-Clip E2 (10)
AXIC0724	Pinion Gear 32P 13T Steel 3mm Motor Shaft	Zahnradgetriebe 32P 13T Stahl 3mm Motorwelle	Arbre de moteur à engrenages à pignons en acier 32P 13T de 3 mm	Pignone 32P 13T acciaio 3mm albero motore
AXIC0725	Pinion Gear 32P 14T Steel 3mm Motor Shaft	Zahnradgetriebe 32P 14T Stahl 3mm Motorwelle	Arbre de moteur à engrenages à pignons en acier 32P 14T de 3 mm	Pignone 32P 14T acciaio 3mm albero motore
AXIC0834	Aluminum Servo Horn 23T	Aluminium-Servohorn, 23T	Renvoi de commande du servo en aluminium 23T	Squadretta servo alluminio, 23T
AXIC1009	Hex Socket Oversize Head 3x10mm (10)	M3 x 10 mm Übergröße-Flachkopf (10)	Tête surdimensionnée creuse hexagonale 3 x 10 mm (10)	Vite con testa esagonale maggiorata 3x10 mm (10 pezzi)
AXIC1028	Pin 2.0x11mm (6)	Stift 2,0x11mm (6)	Goupille 2,0 x 11 mm (6)	Perno 2,0x11 mm (6)
AXIC1045	Nylon Locknut M4, Black (10)	Nylon-Feststellmutter M4 Schwarz (10)	Contre-écrou en nylon M4, noir (10)	Controdado nylon M4, Nero (10)
AXIC1146	Hex Socket Button Head Screw M2x4mm, Black (10)	Sechskant-Rundkopfschrauben, M2 x 4 mm, Schwarz (10)	Vis à tête bombée creuse hexagonale M2 x 4 mm, noire (10)	Vite a testa bombata cava esagonale M2x4mm, Nero (10)
AXIC1148	WB8-HD Driveshaft Coupler Set Yeti	WB8-HD-Antriebswellenkupplungssatz Yeti	Ensemble de couplage d'arbre de transmission Yeti WB8-HD	Set accoppiamento albero trasmissione WB8-HD Yeti
AXIC1180	Hex Socket Button Head Screw M3x18mm (10)	Sechskant-Rundkopfschraube M3 x 18 mm (10)	Vis à tête bombée creuse hexagonale M3 x 18 mm (10)	Vite testa bombata cava esagonale M3x18 mm (10)

Part #	Description	Beschreibung	Description	Descrizione
AXIC1181	Hex Socket Button Head M3x20mm (10)	Sechskant-Rundkopfschraube M3 x 20 mm (10)	Douille à six pans à tête bombée M3 x 20 mm (10)	Vite testa bombata cava esagonale M3x20 mm (10)
AXIC1213	Bearing 5x8x2.5mm (2)	Lager 5 x 8 x 2,5 mm (2)	Roulement 5 x 8 x 2,5 mm (2)	Cuscinetto 5x8x2,5mm (2)
AXIC2014	Gate Marker Set Green/Orange (10)	Gate Marker-Set Grün Orange (10)	Ensemble de marqueurs de porte vert/orange (10)	Set di gate marker verdi/ arancioni (10)
AXIC3066	Cap Head Screw M2x8mm, Black (10)	Inbusschraube M2 x 8 mm Schwarz (10)	Vis d'assemblage creuse M2 x 8 mm, noire (10)	Vite a testa cilindrica M2x8 mm, Nero (10)
AXIC3165	Pin 2.5x12mm (6)	Stift 2,5 x 12 mm (6)	Axe 2,5 x 12 mm (6)	Perno 2,5x12 mm (6)
AXIC4403	Hex Button Head Shoulder Screw M3x4x10mm (6)	Sechskant-Pass-Schulterschraube M 3 x 4 x 10mm (6)	Vis à épaulement à six pans creuse à tête bombée M3 x 4 x 10 mm (6)	Vite a brugola testa bombata spalla liscia M3x4x10mm (6)
AXIC4406	Bearing 7x14x3.5mm (2)	Lager 7 x 14 x 3,5 mm (2)	Roulement 7 x 14 x 3,5 mm (2)	Cuscinetto 7x14x3,5 mm (2)
AXIC4407	Bearing 5x14x5mm (2)	Lager 5 x 14 x 5 mm (2)	Roulement 5 x 14 x 5 mm (2)	Cuscinetto 5x14x5 mm (2)
DYN2950	8-in-1 Hex Wrench Kit	8-in-1 Sechskantschlüsselsatz	Kit de clés hexagonales 8-en-1	Set chiavi esagonali 8-in-1
DYNT0500	Ready-To-Run Startup Tool Set	Betriebsbereiter Anfänger-Werkzeugsatz	Ensemble d'outils de démarrage prêt à rouler	Set di strumenti di avvio pronti all'uso
PRO119714	1/10 Interco Super Swamper XL G8 F/R 1.9" Rock Crawling Tires (2)	1/10 Interco Super Swamper XL G8 F/R 1.9" Rock Crawling Reifen (2)	Pneus d'avancée sur les roches 1,9 po A/A Interco Super Swamper XL G8 à l'échelle 1/10 (2)	Ruote 1/10 Interco Super Swamper XL G8 F/R 1.9" Rock Crawling (2)
PRO278100	1/10 Rock Shooter Aluminum Front/Rear 1.9" 12mm Crawling Wheels (2)	1/10 Rock Shooter Aluminum Front/Heck 1,9" 12mm Crawling Räder (2)	Roues d'avancée 12 mm 1,9 po avant/arrière en aluminium Rock Shooter 1/10 (2)	Cerchi 1/10 Rock Shooter alluminio ant/post 1.9" 12 mm Crawling (2)
PRO361500	1/10 Cliffhanger HP Cab-Only Clear Body 12.3" (313mm) WB Crawlers	1/10 Cliffhanger HP Cab-Only transparentes Gehäuse 12,3" (313mm) WB Crawler	Carrosserie transparente (cabine uniquement) Cliffhanger HP à l'échelle 1/10 pour crawlers à empattement de 12,3 po (313 mm)	Cliffhanger HP, scocca trasparente, solo cabina, 1/10, passo da 313 mm (12,3"), crawler
PRO362000	1/10 1997 Dodge Dakota Clear Body 12.3" (313mm) Wheelbase Crawlers	1/10 1997 Dodge Dakota transparentes Gehäuse 12,3" (313mm) Radstand Crawler	Carrosserie transparente Dodge Dakota 1997 à l'échelle 1/10 pour crawlers à empattement de 12,3 po (313 mm)	Dodge Dakota 1997, scocca trasparente, 1/10, passo da 313 mm (12,3")
PRO362300	1/10 1979 Toyota Land Cruiser FJ40 Clear Body/Cage 12.3" WB Crawlers	1/10 1979 Toyota Land Cruiser FJ40 transparentes Gehäuse/Käfig 12,3" Radstand Crawler	Carrosserie transparente Toyota Land Cruiser FJ40 de 1979 à l'échelle 1/10 avec cage pour crawlers à empattement 12,3 po	Toyota Land Cruiser FJ40 1979, gabbia / scocca trasparente, 1/10, passo da 313 mm (12,3"), crawler
PRO362500	1/10 Coyote Grande Clear Body 12.3" Wheelbase Crawlers	1/10 Coyote Grande transparentes Gehäuse 12,3" Radstand Crawlers	Carrosserie transparente Coyote Grande à l'échelle 1/10 pour crawlers à empattement de 12,3 po	Coyote Grande, scocca trasparente, 1/10, passo da 313 mm (12,3"), crawler
PRO361700	1/10 Coyote HP Clear Body 12.3" Wheelbase Crawlers	1/10 Coyote HP transparentes Gehäuse 12,3" Radstand Crawlers	Carrosserie transparente Coyote HP à l'échelle 1/10 pour crawlers à empattement de 12,3 po	Coyote HP, scocca trasparente, 1/10, passo da 313 mm (12,3"), crawler
PRO1012810	1/10 Hyrax G8 F/R 1.9" Crawler Tires Mounted 12mm Black Impulse (2)	1/10 Hyrax G8 F/R 1,9" Crawler montierte Reifen 12mm Black Impulse (2)	Pneus AV/AR de 1,9 po Hyrax G8 à l'échelle 1/10 pour crawlers, montés en 12 mm, Black Impulse (2)	Ruote 1/10 Hyrax G8 Ant./Post. 1.9" montate su Impulse 12 mm neri (2)
PRO1025403	1/10 Aztek Predator Front/Rear 1.9" Rock Crawling Tires (2)	1/10 Aztek Predator Front/Heck 1,9" Rock Crawling Reifen (2)	Pneus d'avancée sur les roches 1,9 po avant/arrière Aztek Predator 1/10 (2)	Ruote 1/10 Aztek Predator Ant./ Post. 1.9" Rock Crawling (2)
SEHREEFS180	Brass Portal Covers SCXPro / Capra / SCX10.3	Portal-Achsschenkel-Abdeckungen SCXPro / Capra / SCX10.3	Couvercles de portique en laiton SCXPro / Capra / SCX10.3	Coperture Portal ottone SCXPro / Capra / SCX10.3
SPMR6125	DX6C 6-Channel DSMR Transmitter Only	Nur DX6C DSMR-Sender mit 6 Kanälen	Émetteur DSMR DX6C à 6 canaux uniquement	DX6C 6 canali DSMR solo trasmittente
SPMRSLT320	SLT3 3-Channel SLT Transmitter Only	Nur SLT3 3-Kanal SLT-Sender	Émetteur SLT à 3 canaux SLT3 uniquement	SLT3 3 canali solo trasmittente
SPMS664	S664 Standard Waterproof Metal Gear Servo 25T	S664 Standard Wasserdichtes Metallgetriebe Servo 25T	Servo étanche à engrenages métalliques standard S664 25T	S664 Servo impermeabile standard con ingranaggi in metallo 25T
SPMSR515	SR515 DSMR 5-Channel Sport Receiver	DSMR-Sportempfänger SR515 mit 5 Kanälen	Récepteur sport DSMR à 5 canaux SR515	SR515 DSMR Sport, ricevitore, 5 canali
SPMSS7110	S7110 Low Profile Servo Winch: 1/10 Rock Crawlers	S7110 Flache Servo Winde: 1/10 Rock Crawler	Bobine de servo à profil bas S7110 : Rock Crawlers 1/10	S7110 argano servo basso profilo: 1/10 Rock Crawlers
SPMSSX108	SX108 Micro Metal Gear Servo	SX108 Mikro-Metallgetriebeservo	Micro servo à engrenage métallique SX108	Servo micro ingranaggi metallo SX108
SPMX323S30	11.1V 3200mAh 3S 30C Smart G2 LiPo Battery: IC3	11,1V 3200 mAh 3S 30C Smart G2 LiPo-Akku: IC3	Batterie Li-Po G2 Smart 11,1 V 3200 mAh 3S 30C : IC3	Batteria 11,1 V 3200 mAh 3S 30C Smart G2 LiPo: IC3
SPMXC2010	S2200 G2 AC 2x200W Smart Charger	S2200 G2 AC 2x200W Smart Ladegerät	Chargeur Smart 2 x 200 W CA G2 S2200	Caricabatterie Smart S2200 G2 CA 2x200 W

Part #	Description	Beschreibung	Description	Descrizione
SPMXC2020	S1200 G2 AC 1x200W Smart Charger	S1200 G2 AC 1x200 W Smart-Ladegerät	Chargeur Smart 1 x 200 W c.a. G2 S1200	Caricabatterie Smart S1200 G2 CA 1x200W
SPMXC2050	S155 55W AC G2 Smart Charger	S155 55 W AC G2 Smart-Ladegerät	Chargeur c.a. Smart S155 G2 55 W	Caricabatterie Smart S155 G2 55 W CA
SPMXC2080	S1100 G2 1x100W AC Smart Charger	S1100 G2 1x100W AC Smart-Ladegerät	Chargeur Smart CA 1 x 100 W G2 S1100	Caricabatterie Smart S1100 G2 1x100 W CA
SPMXPSA400	Smart Powerstage 3S Air Bundle: G2 2200mAh 3S LiPo IC3 & S155 Charger	Smart 3S Air-Leistungsteilpaket: G2 2200mAh 3S LiPo IC3 & S155 Ladegerät	Ensemble Smart Powerstage Air 3S : Li-Po 2200 mAh 3S G2 IC3 et chargeur S155	Smart Powerstage 3S Air Bundle: Caricabatterie G2 2200 mAh 3S LiPo IC3 e S155
SPMXSE40	Firma 40A Lite Brushed Smart ESC, 2S-3S: IC3	Firma 40A Smart-Geschwindigkeitsregler mit Bürstenmotor, 2S-3S: IC3	Variateur ESC à balais Smart Firma 40 A, 2S-3S : IC3	Smart ESC Firma 40 A Lite a spazzole 2S-3S: IC3
SPMXSE1040	Firma 40A Brushed Waterproof ESC, 2S-3S: IC3	Firma 40A wasserdichter Geschwindigkeitsregler mit Bürstenmotor 2S-3S: IC3	Contrôle de vitesse électronique étanche à balais Firma 40 A, 2S-3S : IC3	ESC Firma 40A a spazzole impermeabile, 2S-3S: IC3
SPMXSEM1040A	Firma 2-in-1 Brushless Crawler Motor/ESC: 1400Kv	Firma 2-in-1 Bürstenloser Crawler-Motor/Geschwindigkeitsregler: 1400Kv	Variateur ESC/moteur sans balais 2-en-1 Crawler Firma : 1400 Kv	Motore/ESC 2-in-1 Firma Brushless Crawler: 1400 Kv
SPMXSEM1040B	Firma 2-in-1 Brushless Crawler Motor/ESC: 2300Kv	Firma 2-in-1 Bürstenloser Crawler-Motor/Geschwindigkeitsregler: 2300 Kv	Variateur ESC/moteur sans balais 2-en-1 Crawler Firma : 2300 kV	Motore/ESC 2-in-1 Firma Brushless Crawler: 2300 Kv
SPMXSEMC09	Firma 60A Brushless Smart ESC / 2800Kv Sensored Motor Crawler Combo	Firma 60A Bürstenloser Smart-Geschwindigkeitsregler / 2800 Kv Motor mit Sensor Crawler Combo	Combo variateur ESC sans balais 60 A Smart Firma / moteur Crawler avec capteurs 2800 Kv	Combo Smart ESC Firma 60 A Brushless / Motore con sensori 2800 Kv

ELECTRONICS // ELECTRONIK // COMPOSANTS ÉLECTRONIQUES // ELETTRONICA

Part #	Description	Beschreibung	Description	Descrizione
AXI-1376	Axial Slickrock 35T 540 Brushed Motor	540-Bürstenmotor mit 35 Turns	Moteur à balais Slickrock 35T 540 Axial	Motore a spazzole Axial Slickrock 35T 540
SPMRSLT380	SLT3 3-Channel 2.4Ghz SLT Transmitter Only	Nur SLT3 3-Kanal 2.4 Ghz SLT-Sender	Émetteur SLT à 3 canaux 2,4 Ghz SLT3 uniquement	SLT3 3 canali 2,4 Ghz SLT solo trasmittente
SPMS683	S683 Standard Waterproof Metal Gear Servo 25T	683 Standard Wasserdichtes Metallgetriebe Servo 25T	Servo étanche à engrenages métalliques standard 683 25T	Servo 683 impermeabile standard con ingranaggi in metallo 25T
SPMSR515	SR515 DSMR 5-Channel Sport Receiver	Spektrum™ SR515 DSMR Sport-Empfänger mit 5 Kanälen	Récepteur sport DSMR 5 canaux SR515	Ricevitore SR515 DSMR 5 Canali Sport
SPMSSX108	SX108 Micro Metal Gear Servo	SX108 Mikro-Metallgetriebeservo	Micro servo à engrenage métallique SX108	Servo micro ingranaggi metallo SX108
SPMXSE1040	Firma 40A Brushed Waterproof ESC, 2S-3S: IC3	Firma 40A Bürstenloser, wasserdichter Geschwindigkeitsregler, 2S-3S: IC3	Contrôle de vitesse électronique étanche à balais Firma 40A, 2S-3S : IC3	Firma 40A Brushed Waterproof ESC, 2S-3S: IC3



We. Build. Adventure.

facebook.com/axialinc | instagram.com/axialadventure/
twitter.com/axialrc | youtube.com/axialvideos

WWW.AXIALADVENTURE.COM

©2025 Horizon Hobby, LLC. Axial, the Axial logo, SLT3, Firma, SCX10, and the Horizon Hobby logo are trademarks or registered trademarks of Horizon Hobby, LLC. The Spektrum trademark is used with permission of Bachmann Industries, Inc. Interco Tire Corporation and Trail-Gear, Inc. logos are property of their respective owners and are used with permission or under license by Horizon Hobby, LLC. Super Swamper is a registered trademark of Interco Tire Corporation and is used under license by Horizon Hobby, LLC. All other trademarks, service marks and logos are property of their respective logos. © 2025 Toyota Motor North America. All rights reserved. Designs of Toyota cars and all other associated marks, emblems and designs are intellectual property rights of Toyota Motor Corporation and used with permission. US 9,930,567. US 10,419,970. US 10,849,013. Other patents pending.

Updated 12/25 **AXI-2062** **1160103.1**