E-flite
ADVANCING ELECTRIC FLIGHT

4-Site 3D Flat Foamy

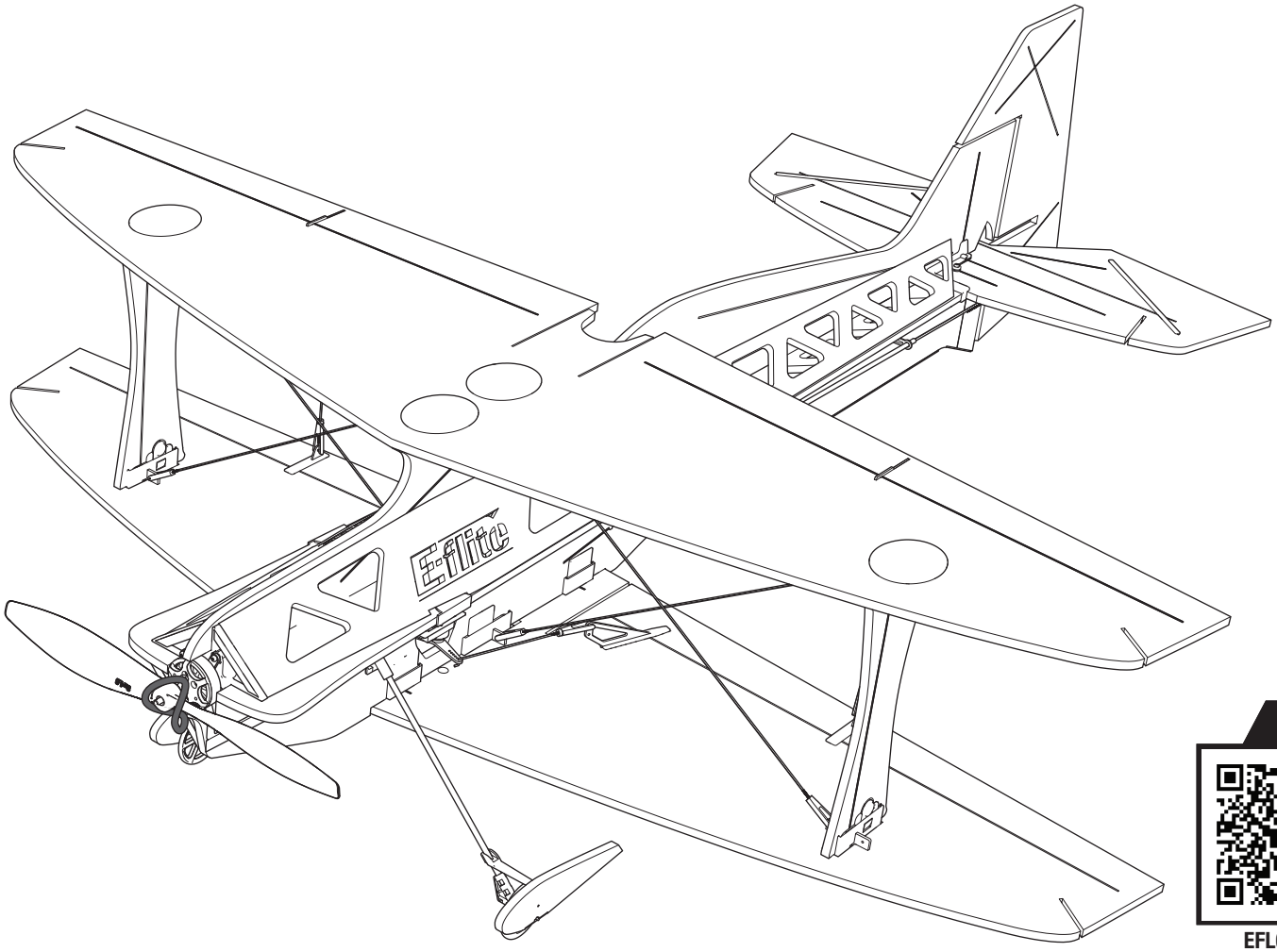

BNF BASIC

EFL02950

Scan the QR code and select the Manuals and Support quick links from the product page for the most up-to-date manual information.

Scannen Sie den QR-Code und wählen Sie auf der Produktseite die Quicklinks Handbücher und Unterstützung, um die aktuellsten Informationen zu Handbücher.

Scannez le code QR et sélectionnez les liens rapides Manuals and Support sur la page du produit pour obtenir les informations les plus récentes sur le manuel.

Scannerizzare il codice QR e selezionare i Link veloci Manuali e Supporto dalla pagina del prodotto per le informazioni manuali più aggiornate.

PNP PLUG-N-PLAY

EFL02975

Instruction Manual
Bedienungsanleitung
Manuel d'utilisation
Manuale di Istruzioni

879204
Created 10/24

HORIZON HOBBY

NOTICE

All instructions, warranties and other collateral documents are subject to change at the sole discretion of Horizon Hobby, LLC. For up-to-date product literature, visit horizonhobby.com or towerhobbies.com and click on the support or resources tab for this product.

MEANING OF SPECIAL LANGUAGE

The following terms are used throughout the product literature to indicate various levels of potential harm when operating this product:
WARNING: Procedures, which if not properly followed, create the probability of property damage, collateral damage, and serious injury OR create a high probability of superficial injury.
CAUTION: Procedures, which if not properly followed, create the probability of physical property damage AND a possibility of serious injury.
NOTICE: Procedures, which if not properly followed, create a possibility of physical property damage AND little or no possibility of injury.

WARNING: Read the ENTIRE instruction manual to become familiar with the features of the product before operating. Failure to operate the product correctly can result in damage to the product, personal property and cause serious injury.
This is a sophisticated hobby product. It must be operated with caution and common sense and requires some basic mechanical ability. Failure to operate this Product in a safe and responsible manner could result in injury or damage to the product or other property. This product is not intended for use by children without direct adult supervision. Do not use with incompatible components or alter this product in any way outside of the instructions provided by Horizon Hobby, LLC. This manual contains instructions for safety, operation and maintenance. It is essential to read and follow all the instructions and warnings in the manual, prior to assembly, setup or use, in order to operate correctly and avoid damage or serious injury.

AGE RECOMMENDATION: Not for children under 14 years. This is not a toy.

Safety Precautions and Warnings

As the user of this product, you are solely responsible for operating in a manner that does not endanger yourself and others or result in damage to the product or the property of others.

- Always keep a safe distance in all directions around your model to avoid collisions or injury. This model is controlled by a radio signal subject to interference from many sources outside your control. Interference can cause momentary loss of control.
- Always operate your model in open spaces away from full-size vehicles, traffic and people.
- Always carefully follow the directions and warnings for this and any optional support equipment (chargers, rechargeable battery packs, etc.).
- Always keep all chemicals, small parts and anything electrical out of the reach of children.
- Always avoid water exposure to all equipment not specifically designed and protected for this purpose. Moisture causes damage to electronics.
- Never place any portion of the model in your mouth as it could cause serious injury or even death.
- Never operate your model with low transmitter batteries.
- Always keep aircraft in sight and under control.
- Always use fully charged batteries.
- Always keep transmitter powered on while aircraft is powered.
- Always remove batteries before disassembly.
- Always keep moving parts clean.
- Always keep parts dry.
- Always let parts cool after use before touching.
- Always remove batteries after use.
- Always ensure failsafe is properly set before flying.
- Never operate aircraft with damaged wiring.
- Never touch moving parts.

WARNING AGAINST COUNTERFEIT PRODUCTS: If you ever need to replace your Spektrum receiver found in a Horizon Hobby product, always purchase from Horizon Hobby, LLC or a Horizon Hobby authorized dealer to ensure authentic high-quality Spektrum product. Horizon Hobby, LLC disclaims all support and warranty with regards, but not limited to, compatibility and performance of counterfeit products or products claiming compatibility with DSM or Spektrum technology.

Registration

Register your product today to join our mailing list and keep up to date with product updates, offers and E-flite® news.

Table of Contents

Safety Precautions and Warnings 2
Auto Transmitter Setup *BNF* *4*
Manual Transmitter Setup *BNF* *5*
Model Assembly 6
Battery Installation and ESC Arming 9
General Binding Tips and Failsafe *BNF* *10*
Transmitter and Receiver Binding / Enabling and Disabling SAFE Select *BNF* *10*
Control Surface Centering 11
Center of Gravity (CG) 11
SAFE® Select Switch Designation *BNF* *12*
Smart™ Technology Telemetry 13
Dual Rates and Control Throws 13
Control Surface Direction 14
AS3X+® Control Response Test 15
In Flight Trimming 16
Flying Tips and Repairs 16
Post Flight Checklist 16
Receiver Installation *(PNP)* *17*
Thrust Reversing *(Optional)* *17*
Motor Service 18
Troubleshooting Guide AS3X *BNF* *19*
Troubleshooting Guide 19
Replacement Parts 20
Recommended Items 20
Optional Items 20
Important Federal Aviation Administration (FAA) Information 21
AMA National Model Aircraft Safety Code 21
Limited Warranty 22
Contact Information 22
FCC Information 23
IC Information 23
Compliance Information for the European Union 23

Specifications	
Wingspan	31.5in (800mm)
Length	35.9in (911mm)
Weight	Without Battery: 15.8oz (447g) With Recommended 3S 850mAh Flight Battery: 18.3oz (519g)

Included Equipment	
Receiver *(BNF only)*	Spektrum™ AR630+ 6-Channel AS3X+/SAFE Telemetry Receiver (SPM-1030)
ESC	Avian™ 30A Smart Lite Brushless ESC with IC2 (SPMXAE30E)
Motor	2408-1300Kv Outrunner, 14-Pole (SPMXAM3400)
Propeller	Propeller 9 x 4.6E (EFLO1988)
Servos	(3) A347 9g Digital Metal Gear (SPMSA347) (Aileron, Elevator, Rudder)

Recommended Equipment	
Transmitter	NX7e+ 7 Ch DSMX Transmitter Only (SPMR7110)
Flight Battery	850mAh 3S 11.1V Smart G2 LiPo 30C; IC2 (SPMX8503S30)
Charger	S155 Smart Charger, 1x 55W (SPMXCA320)

Optional Batteries	
SPMX224S50	800mAh 3S 11.1V LiPo 50C JST-RCY (SPMX8003SJ50), RCY to IC2 adapter required (SPMXCA323)

Included Hardware		
2	M2 x 10 Phillips Machine Screw - Horizontal Stabilizer Securing Screws	PH1 Phillips Screwdriver
4	M2 x 10 Phillips Self Tapping Screw - Motor Mount Screws	PH1 Phillips Screwdriver
2	M2.5 x 10 Flat Head Hex Machine Screw - Prop Adapter Screws	1.5mm Hex Wrench
6	M2 x 8 Self Tapping Screw - Servo Mounting Screws	PH1 Phillips Screwdriver
3	M2 X 4.5 Machine Screw - Servo Arm Screws	PH1 Phillips Screwdriver

Required Tools

- 1.5mm Hex Driver
- PH1 Phillips Screwdriver

Auto Transmitter Setup *BNF*

The AR630+ receiver included with your 4-Site, is programmed with AS3X+/SAFE. This includes a Smart Transmitter File, with the setup developed specifically for the 4-Site. This allows you to quickly import the settings for your transmitter if desired, directly from your receiver, during the binding process.

Supported Transmitters and Firmware Requirements:
- All NX Transmitters (with firmware version 4.0.11+)
- iX14 (with app version 2.0.9+)
- iX20 (with app version 2.0.9+)

Important: iX12 and DX transmitters do not support Smart Transmitter File transfers at this time.

To load the Smart Transmitter Files:

1. Power ON the transmitter.
2. Create a new blank model file on your transmitter.
3. Power ON the receiver.
4. Press the bind button on the receiver. The Orange LED on the receiver flashes when the receiver is in bind mode.
5. Put the transmitter into bind mode. The model will bind normally.
6. Once binding is complete the download screen will appear as shown at the right.
7. Select **LOAD** to continue.

Smart Transmitter File
The receiver contains a pre-loaded Smart Transmitter file.

Rx Version: EFL02950 Firmware version

Do you want to the load the file from the receiver

SKIP	LOAD

The NOTICE screen, as shown at the right, is a warning that downloading will overwrite all the information of the current model. If this a new "blank" model it will simply populate the transmitter parameters of the 4-Site into the selected model and rename it 4-Site.

NOTICE: Confirming will override any previously saved transmitter setups.

8. Select CONFIRM to continue.
9. Once the download is complete the file will be installed on your transmitter and the telemetry information will be loaded automatically.

NOTICE
This WILL overwrite ALL current model settings.

If stock BNF model hardware has changed, the receiver's file may not work properly- Do not use without checking everything.

Do you want to the load the file from the receiver

BACK	CONFIRM

Once loading is complete the radio will return to the home screen, and you will see "4-Site BNF-B EFL02950".

Transmitter setup is now complete.

Pre-Loaded Transmitter File Operation Notes

Flight Timer
There is no flight timer loaded in the transmitter setup file. The voltage monitor provides alerts when the battery voltage has dropped to just above the LVC, indicating it is time to land. This system only functions when using Smart batteries. If you are not using a Smart battery, set your flight timer to monitor your flight time.

iX series: The photo imported for the iX series is a representation of a sport plane. See your transmitter manual for instructions to change the photo, if desired.

Manual Transmitter Setup *BNF*

IMPORTANT: After you set up your model, always rebind the transmitter and receiver to set the desired failsafe positions.

SAFE Select is best enabled via Forward Programming. SAFE® Select technology can be assigned to any open switch (2 or 3 position) controlling a channel (5–9) on your transmitter. Refer to the safe select designation section of this manual to assign safe select to your desired transmitter switch.

For the first flight, set the flight timer to 3 minutes when using a 3S 850mAh battery. Adjust the time after the initial flight.

DX Series Transmitter Setup
1. Power ON your transmitter, click on scroll wheel, roll to **System Setup** and click the scroll wheel. Choose yes.
2. Go to **Model Select** and choose ***<Add New Model>*** at the bottom of the list. The system asks if you want to create a new model, select ***Create***
3. Set **Model Type**: Select ***Airplane Model Type*** by choosing the airplane. The system asks you to confirm model type, data will be reset. Select ***YES***
4. Set **Model Name**: Input a name for your model file
5. Select **<Main Screen>,** Click the scroll wheel to enter the **Function List**
6. Set **D/R (Dual Rate) and Expo**; ***Aileron*** Set **Switch**: ***Switch F*** Set **High Rates: *100%*, Expo *30%*** - **Low Rates: *70%*, Expo *20%***
7. Set **D/R (Dual Rate) and Expo**; ***Elevator*** Set **Switch**: ***Switch C*** Set **High Rates**: ***100%*, Expo *30%*** - **Low Rates *70%*, Expo *20%***
8. Set **D/R *(Dual Rate)* and Expo; *Rudder*** Set **Switch: *Switch G*** Set **High Rates: *100%*, Expo *30%* - Low Rates: *70%*, Expo *20%***
9. Set **Throttle Cut**; **Switch**: ***Switch H*, Position: *-100%***

NX Series Transmitter Setup
1. Power ON your transmitter, click on scroll wheel, roll to **System Setup** and click the scroll wheel. Choose yes.
2. Go to **Model Select** and choose ***<Add New Model>*** near the bottom of the list. Select ***Airplane Model Type*** by choosing the airplane, select ***Create***
3. Set **Model Name**: Input a name for your model file
4. Select **<Main Screen>,** Click the scroll wheel to enter the **Function List**
5. Set **D/R (Dual Rate) and Expo**; ***Aileron*** Set **Switch**: ***Switch F*** Set **High Rates: *100%*, Expo *30%*** - **Low Rates: *70%*, Expo *20%***
6. Set **D/R (Dual Rate) and Expo**; ***Elevator*** Set **Switch**: ***Switch C*** Set **High Rates**: ***100%*, Expo *30%*** - **Low Rates *70%*, Expo *20%***
7. Set **D/R *(Dual Rate)* and Expo; *Rudder*** Set **Switch: *Switch G*** Set **High Rates: *100%*, Expo *30%* - Low Rates: *70%*, Expo *20%***
8. Set **Throttle Cut**; **Switch**: ***Switch H*, Position: *-100%***

Dual Rates

Attempt your first flights in low rate. For landings, use high rate elevator.

NOTICE: To ensure AS3X+ technology functions properly, do not lower rate values below 50%. If less control deflection is desired, manually adjust the position of the pushrods on the servo arm.

NOTICE: If oscillation occurs at high speed, refer to the Troubleshooting Guide for more information.

Exponential

After first flights, you may adjust exponential in your transmitter.

iX Series Transmitter Setup
1. Power ON your transmitter and begin once the Spektrtum Airware app is open. Select the orange pen icon in the upper left corner of the screen, the system asks for permission to **Turn Off RF**, select ***PROCEED***
2. Select the three dots in the upper right corner of the screen, select ***Add a New Model***
3. Select **Model Option**, choose ***DEFAULT***, select ***Airplane.*** The system asks if you want to create a new acro model, select ***Create***
4. Select the last model on the list, named **Acro**. Tap on the word Acro and rename the file to a name of your choice
5. Press and hold the back arrow icon in the upper left corner of the screen to return to the main screen
6. Go to the **Model Adjust** menu.
7. Set **Dual Rates and Expo**; Select ***Aileron*** Set **Switch**: ***Switch F*** Set **High Rates: *100%*, Expo *30%*** - **Low Rates: *70%*, Expo *20%***
8. Set **Dual Rates and Expo**; Select ***Elevator*** Set **Switch**: ***SWITCH C*** Set **High Rates**: ***100%*, Expo *30%*** - **Low Rates *70%*, Expo *20%***
9. Set **D/R *(Dual Rate)* and Expo; *Rudder*** Set **Switch: *Switch G*** Set **High Rates: *100%*, Expo *30%* - Low Rates: *70%*, Expo *20%***
10. Set **Throttle Cut**; **Switch**: ***Switch H*, Position: *-100%***

Model Assembly

Horizontal Stabilizer Installation

1. Slide the stabilizer in from the right side of the fuselage with the elevator control horn facing down.
2. Secure the stabilizer using two (2) M2 x 10mm machine screws, one on each side.
3. Connect the elevator clevis to the outside hole on the elevator control horn, and slide the clevis retainer into place.

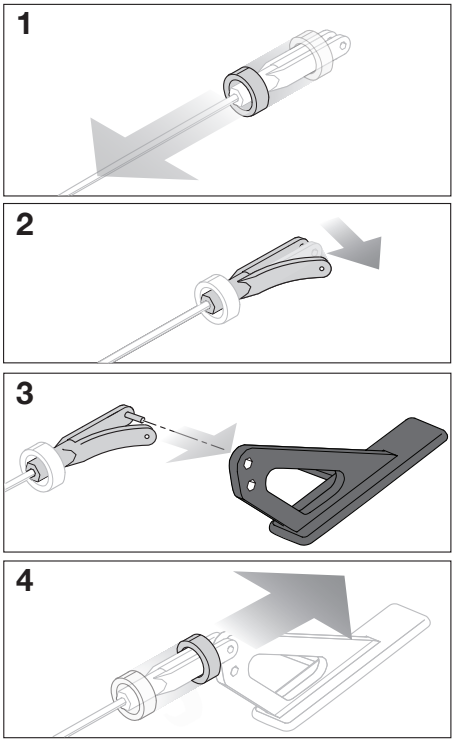

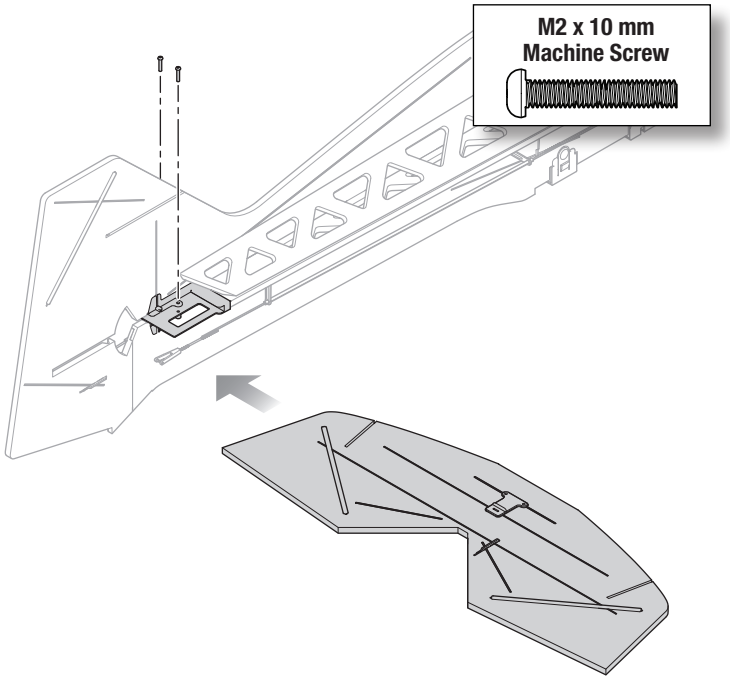

Wing Installation

Mount the Wing to the Fuselage

1. Align the lower wing with the snap connectors.
2. Snap the wing into place on the fuselage.
3. Ensure all three connectors lock securely in place.

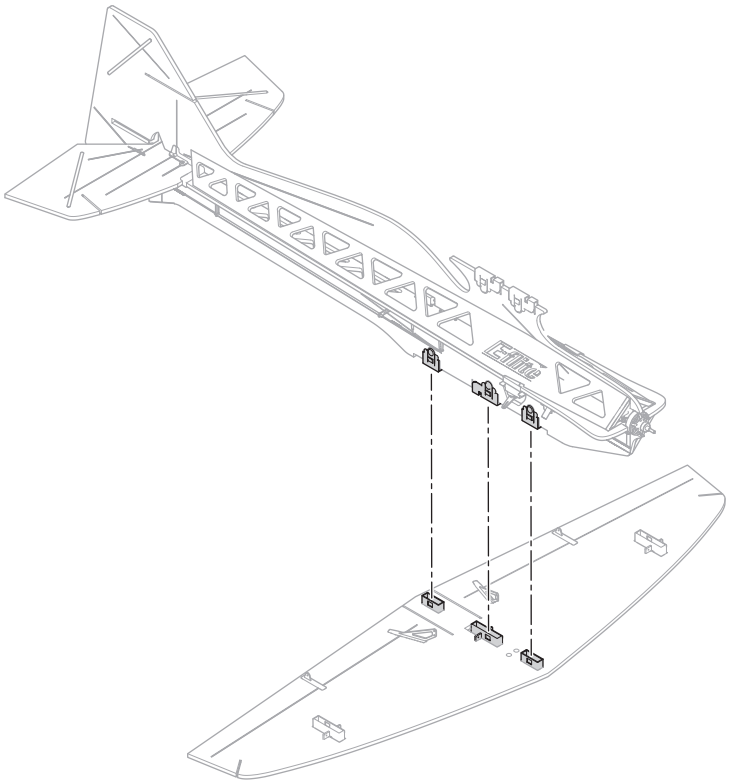

Install the Aileron Pushrods

1. Install the (2)aileron pushrods Z-bends into the outside holes of the aileron servo arms.
2. Connect the clevis to the aileron control horn outside hole, and slide the clevis retainer into place for each aileron.

IMPORTANT: The linkages should be adjusted so the lower ailerons are neutral when the servo is centered. If the ailerons are not centered at neutral, adjust the length of the pushrods.

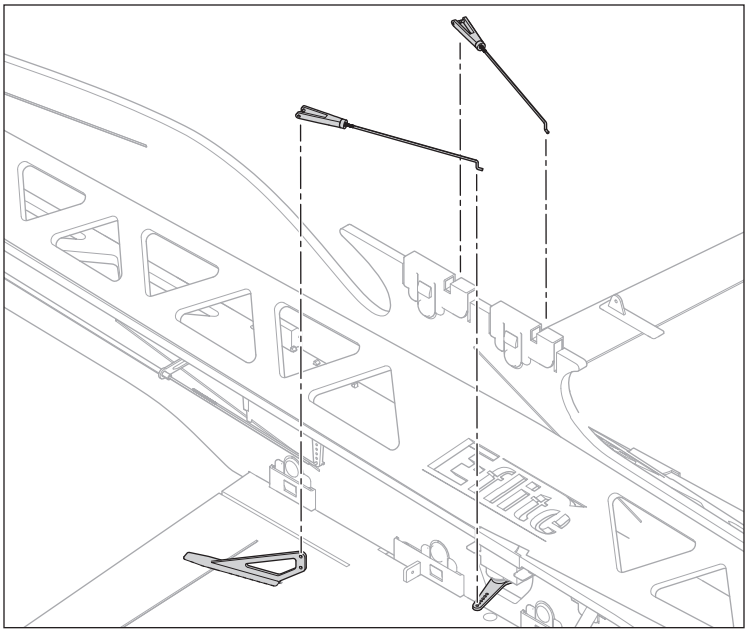

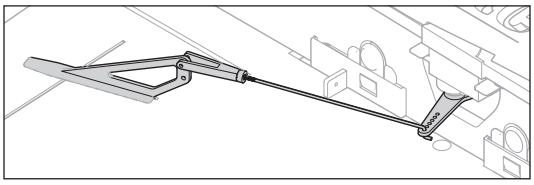

Install the Interplane Struts

1. Insert the interplane struts into the snap connectors on the wing with the release button facing to the left.
2. Ensure each snap connector locks securely in place.

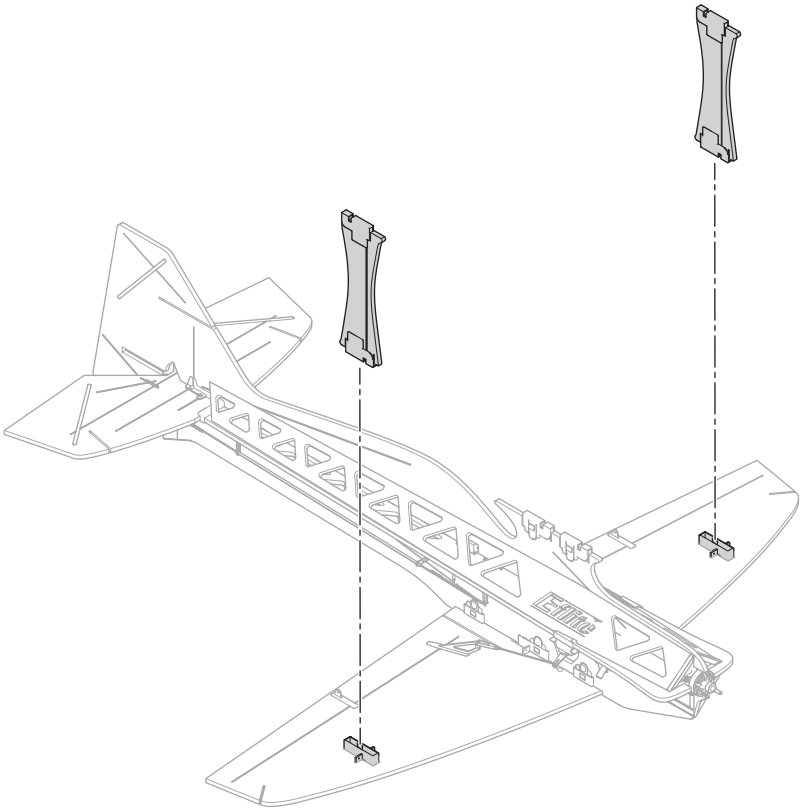

Install the Flying Wires

1. Install the Z-bend side of each flying wire at the center of each wing. Install the bottom from the front and the top from the rear to prevent them from rubbing.
2. Snap the upper wing into place on the fuselage and interplane struts.
3. Rotate the clevis on the other end of the flying wires until the clevis pin aligns perfectly with the hole on the interplane strut mount. The bottom wing must be resting on a flat surface when installing the flying wires.
4. Slide the clevis retainer onto the clevis.
5. Repeat the process for the other three flying wires.
6. Ensure all four snap connectors are locked securely in place.

IMPORTANT: The wing must not be twisted when the flying wires are attached. If there is any load applied when the flying wires are in place, adjust them so both wings are flat.

Front View

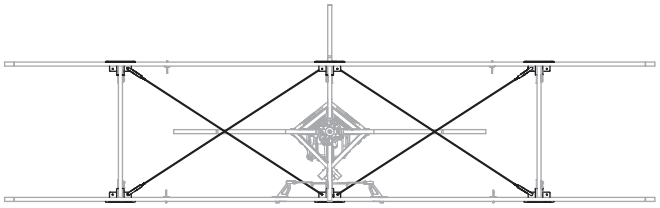

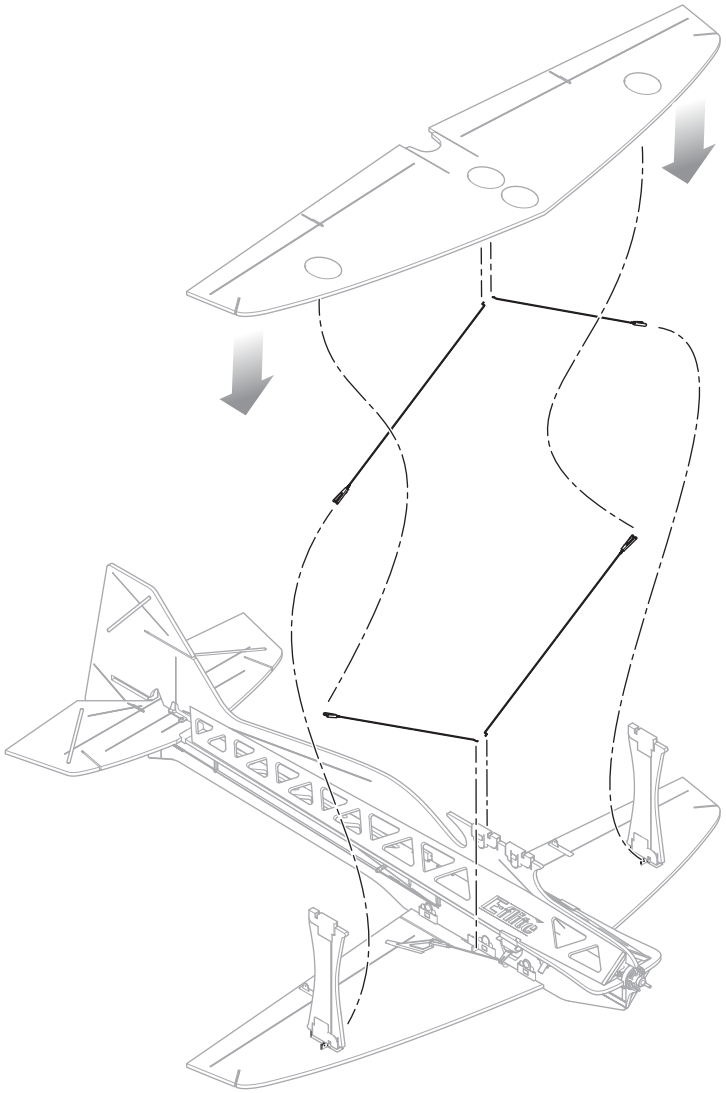

Install the Aileron Interconnect Links

1. Install the Z-bend side of the of the aileron interlink pushrods to the top wing aileron control horns.
2. Attach the clevises to the bottom aileron control horns.
3. Slide the clevis retainers onto the clevises.

IMPORTANT: The linkages should be adjusted so the upper ailerons are neutral when the lower ailerons are neutral. Adjust the interconnect links as necessary to neutralize the upper ailerons.

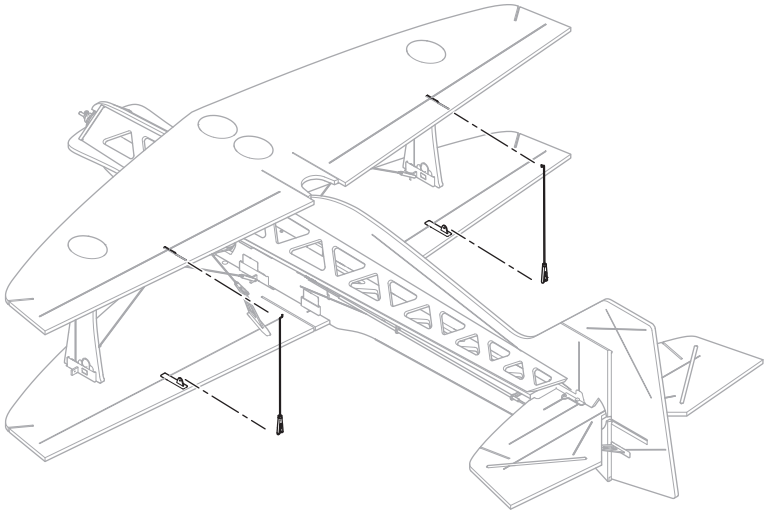

Landing Gear Installation

1. Insert a landing gear strut into the lower mounting block on the fuselage and snap it into the upper landing gear mount.
2. Repeat for the other landing gear strut.

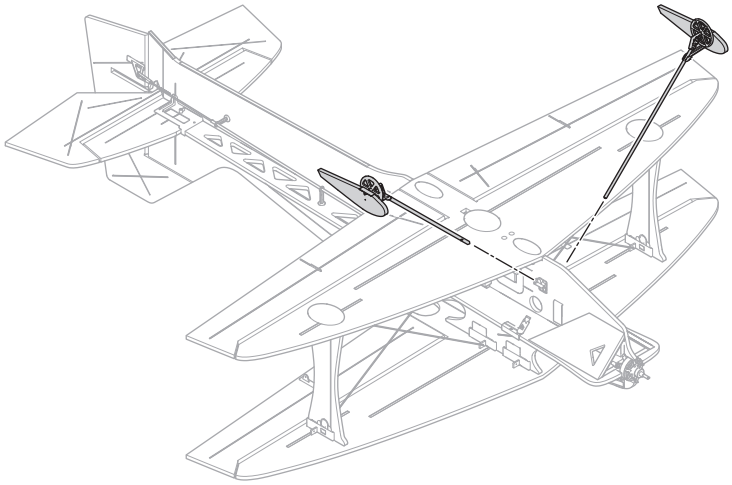

Control Surface Centering

After assembly and transmitter setup, confirm that the control surfaces are centered. The model must be powered, bound to the transmitter in AS3X+ mode, with the throttle left at zero. When enabled, SAFE mode is active at power up. AS3X+ mode is activated when the throttle is raised above 25% for the first time after being powered on. It is normal for the control surfaces to respond to aircraft movement if the aircraft is in AS3X+ or SAFE modes.

1. Verify the trims and sub trims on your transmitter are zero.
2. Power on the model in AS3X+ mode and leave the throttle at zero.
3. Look at the tip of each control surface and verify it is mechanically centered.
4. If adjustment is required, turn the clevis on the linkage to change the length of the linkage between the servo arm and the control horn.

Control Horn and Servo Arm Factory Settings

The table to the right shows the factory settings for the control horns and servo arms. Fly the aircraft at factory settings before making changes.

After flying, you may choose to adjust the linkage positions for the desired control response. See the table to the right.

	Horns	Arms
Elevator	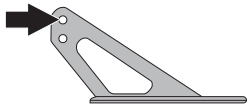	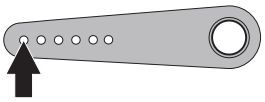
Ailerons	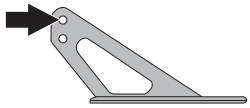	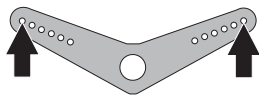
Rudder	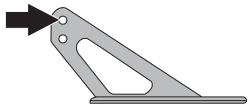	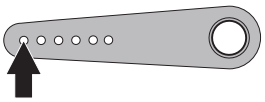

Dual Rates and Control Throws

Program your transmitter to set the rates and control throws to the values given. These values have been tested and are a good starting point to achieve successful flight.
After flying, you may choose to adjust the values for the desired control response.

	High Rate	Low Rate
Aileron (measured at the root)	▲ = 88mm ▼ = 88mm	▲ = 58mm ▼ = 58mm
Elevator (measured at the widest point)	▲ = 58mm ▼ = 58mm	▲ = 40mm ▼ = 40mm
Rudder (measured at the bottom)	▶ = 85mm ◀ = 85mm	◀ = 55mm ▶ = 55mm

	Recommended Expo	
Aileron/Elevator/Rudder	High 30%	Low 20%

Receiver Selection and Installation *PNP*

The recommended receiver for this aircraft is the Spektrum AR630+. If you choose to install a different receiver, ensure that it is at least a 6-channel full range receiver. Refer to the manual of your chosen receiver for correct installation and operation instructions.

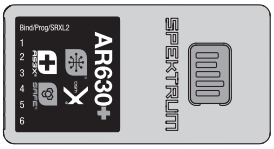

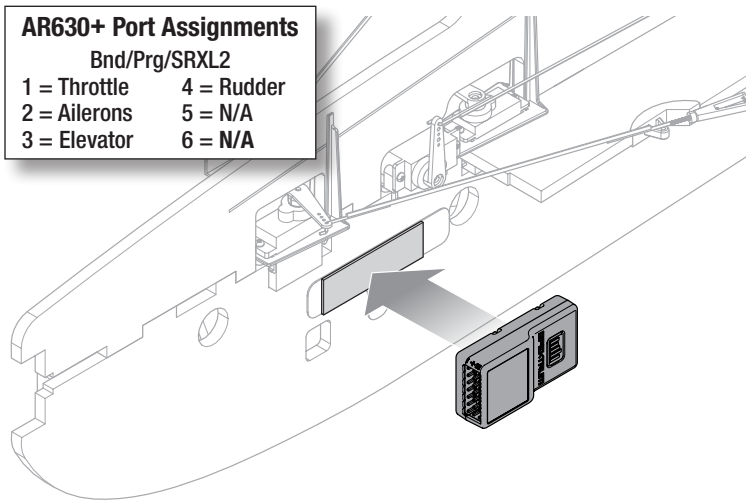

AR630+ Installation

1. Connect the servos to the their respective ports in the receiver using the table at the right.
2. Using high quality-double-sided servo tape (not included), mount the receiver on the left side of the fuselage, under the leading edge of the wing. Mount the receiver in the orientation shown, parallel to the length of the fuselage, with the label facing out and the servo ports toward the front of the aircraft. The orientation of the receiver is critical for all AS3X+ and SAFE technology setups.

⚠ **CAUTION:** Incorrect installation of the receiver could cause a crash.

Battery Installation and ESC Arming

The Spektrum™ Smart 850mAh 3S 11.1V Smart G2 LiPo 30C; IC2 (SPMX8503S30) is recommended for best performance.

Refer to the Optional Parts List for other recommended batteries. If using a battery other than those listed, the battery should be within the range of capacity, dimensions and weight of the Spektrum Li-Po battery pack to fit in the fuselage.

Verify the model balances at the recommended CG before flying.

⚠ **WARNING:** Always keep hands away from the propeller. When armed, the motor will turn the propeller in response to any throttle movement. If your transmitter supports it, always engage throttle cut before approaching the aircraft any time a battery is connected.

1. Lower the throttle and throttle trim to the lowest settings. Power on the transmitter, then wait 5 seconds.
2. Install the fully charged battery in the middle of the battery area, as shown. Secure using the included hook and loop strap.
3. Connect the battery to the ESC.
4. Keep the aircraft immobile and away from wind or the system will not initialize.
   - The ESC will sound a series of tones.
   - An LED will light on the receiver.
5. The ESC is now armed.

NOTICE: If the ESC sounds a continuous double beep after the flight battery is connected, recharge or replace the battery.

⚠ **WARNING:** We do not recommend using the Avian ESC reversing feature with this model.

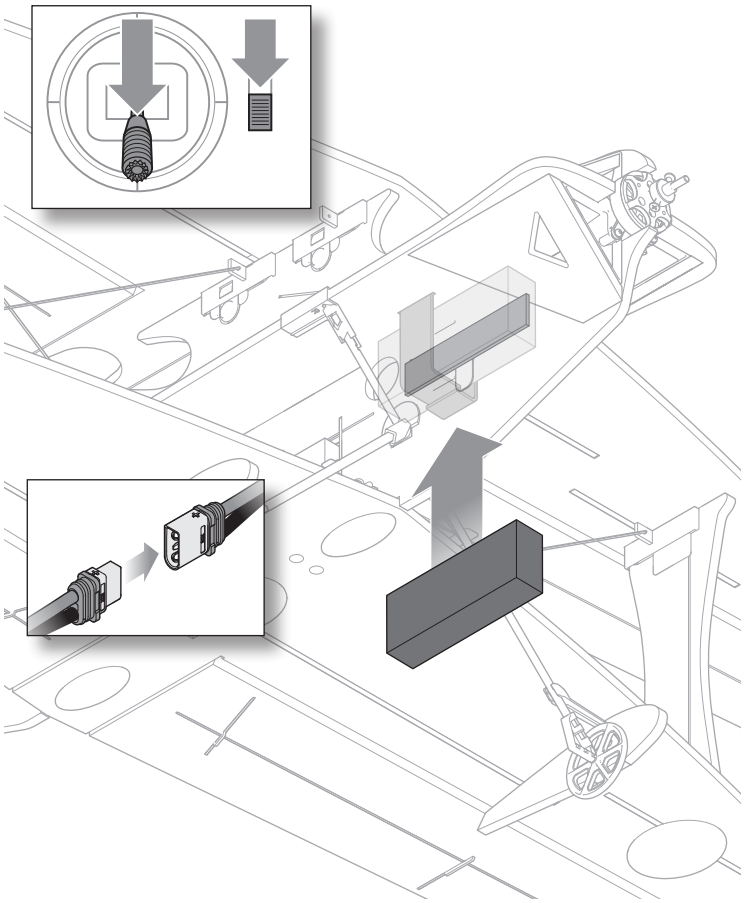

General Binding Tips and Failsafe *BNF*

- The included receiver has been specifically programmed for operation of this aircraft. Refer to the receiver manual for correct setup if the receiver is replaced.
- Keep away from large metal objects while binding.
- Do not point the transmitter's antenna directly at the receiver while binding.
- The orange LED on the receiver will flash rapidly when the receiver enters bind mode.
- Once bound, the receiver will retain its bind settings for that transmitter until you re-bind.
- If the receiver loses transmitter communication, the failsafe will activate. Failsafe moves the throttle channel to low throttle. Pitch and roll channels move to actively stabilize the aircraft in a descending turn.
- If problems occur, refer to the troubleshooting guide or if needed, contact the appropriate Horizon Product Support office.

Transmitter and Receiver Binding / Enabling and Disabling SAFE Select *BNF*

The BNF Basic version of this airplane includes SAFE Select technology, enabling you to choose the level of flight protection. SAFE mode includes angle limits and automatic self leveling. AS3X+ mode provides the pilot with a direct response to the control sticks. SAFE Select is enabled or disabled during the bind process.

With SAFE Select disabled the aircraft is always in AS3X+ mode. With SAFE Select enabled the aircraft will be in SAFE Select mode all the time, or you can assign a switch to toggle between SAFE Select and AS3X+ modes.

Thanks to SAFE Select technology, this aircraft can be configured for full-time SAFE mode, full-time AS3X+ mode, or mode selection can be assigned to a switch.

IMPORTANT: Before binding, read the transmitter setup section in this manual and complete the transmitter setup table to ensure your transmitter is properly programmed for this aircraft.

IMPORTANT: Move the transmitter flight controls (rudder, elevators, and ailerons) and the throttle trim to neutral. Move the throttle to low before and during binding. This process defines the failsafe settings.

You can use either the bind button on the receiver case or the conventional bind plug to complete the binding and SAFE Select process.

SAFE Select can also be activated via Forward Programming in compatible transmitters.

Using The Bind Button...

To Enable SAFE Select

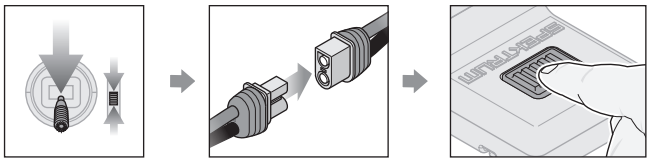

Lower Throttle | Connect Power | Press and hold Bind Button

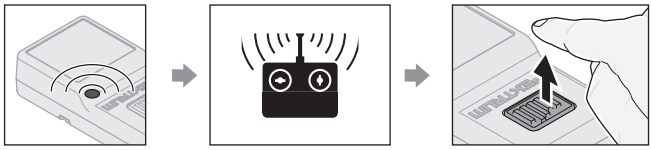

Orange Flashing LED | Bind TX to RX | Release Bind Button

SAFE SELECT ENABLED: The control surfaces cycle back and forth **twice** with a slight pause at neutral position every time the receiver is powered on.

To Disable SAFE Select

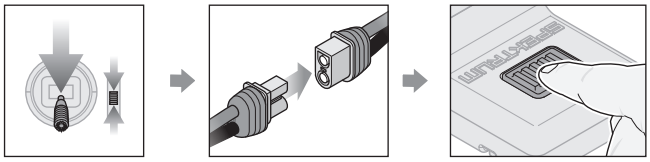

Lower Throttle | Connect Power | Press and hold Bind Button

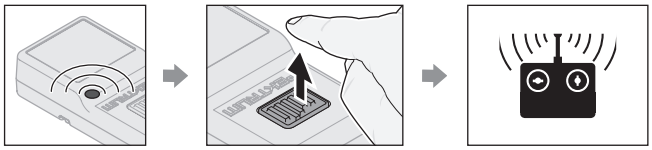

Orange Flashing LED | Release Bind Button | Bind TX to RX

SAFE SELECT DISABLED: The control surfaces cycle back and forth **once** every time the receiver is powered on.

Using The Bind Plug...

To Enable SAFE Select

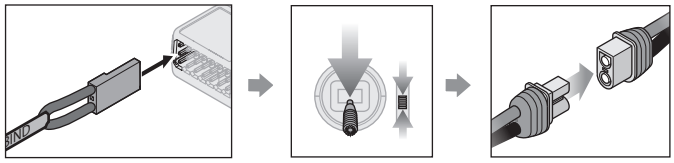

Install Bind Plug | Lower Throttle | Connect Power

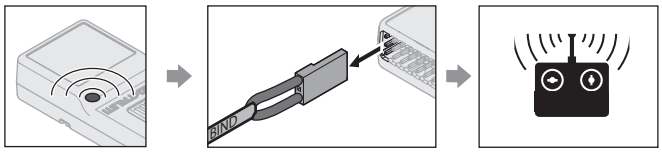

Orange Flashing LED | Remove Bind Plug | Bind TX to RX

SAFE SELECT ENABLED: The control surfaces cycle back and forth **twice** with a slight pause at neutral position every time the receiver is powered on.

To Disable SAFE Select

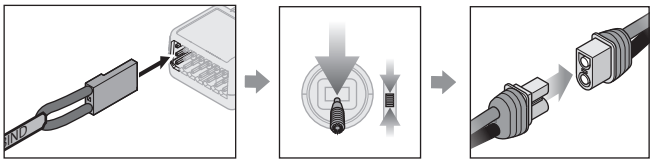

Install Bind Plug | Lower Throttle | Connect Power

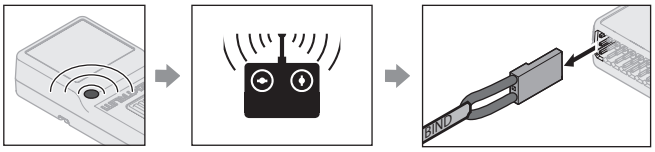

Orange Flashing LED | Bind TX to RX | Remove Bind Plug

SAFE SELECT DISABLED: The control surfaces cycle back and forth **once** every time the receiver is powered on.

SAFE Select can also be activated via Forward Programming in compatible transmitters.

SAFE® Select Switch Designation *BNF*

Once SAFE Select is enabled, you can choose to fly in SAFE mode full-time, or assign a switch. Any switch on any channel between 5 and 9 can be used on your transmitter.

TIP: If model has a reversing ESC feature, Aux2 is not available for safe select.

If the aircraft is bound with SAFE Select disabled, the aircraft will be in AS3X+ mode exclusively.

CAUTION: Keep all body parts well clear of the propeller and keep the aircraft securely restrained in case of accidental throttle activation.

IMPORTANT: To be able to assign a switch, first verify:

- The aircraft was bound with SAFE Select enabled.
- Your choice for the SAFE Select switch is assigned to a channel between 5 and 9 (Gear, Aux1-4), and travel is set at 100% in each direction.
- The aileron, elevator, rudder and throttle direction are set to normal, not reverse.
- The aileron, elevator, rudder and throttle are set to 100% travel. If dual rates are in use, the switches need to be in the 100% position.

See your transmitter manual for more information about assigning a switch to a channel.

Assigning a Switch

1. Power on the transmitter.
2. Power on the aircraft.
3. Hold both transmitter sticks to the inside bottom corners, and toggle the desired switch 5 times quickly (1 toggle = full up and down).
4. The control surfaces of the aircraft will move, indicating the switch has been selected.

Repeat the process to assign a different switch or to deactivate the current switch.

SAFE Select Switch Assignment Stick Positions

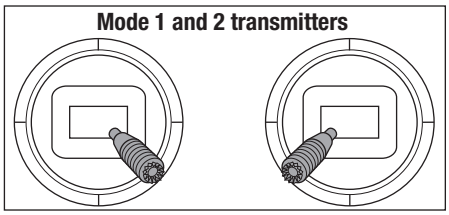

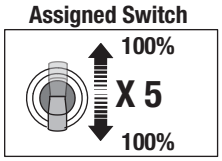

TIP: Use the channel monitor to verify channel movement.

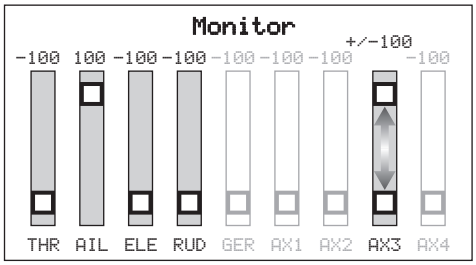

This example of the channel monitor shows the stick positions for assigning a switch, the switch selection on Aux3, and +/- 100% travel on the switch.

Forward Programming

Assign the SAFE Select channel through forward programming on your compatible Spektrum transmitter.

For more information about setting SAFE Select and using Forward Programming, please refer to the following link for a detailed video:

https://www.youtube.com/watch?v=o-46P066cik

Forward Programming SAFE Select Setup	
DX series, NX series, iX series	1. Begin with the transmitter bound to the receiver.
	2. Power ON the transmitter.
	3. Assign a switch for SAFE Select that is not already in use for another function. Use any open channel between 5 and 9 (Gear, Aux1-4).
	4. Set switch H (throttle cut) to prevent accidental motor operation.
	5. Power ON the aircraft. A signal bar appears on your transmitter's main screen when the telemetry information is being received.
	6. Go to the FUNCTION LIST (Model Setup)
	7. Select Forward Programming; Select Gyro Settings, Choose SAFE Select to enter the menu.
	8. Set SAFE Select Ch: To the channel you have chosen for SAFE Select.
	9. Set AS3X+ and SAFE On or Off as desired for each switch position.

Propeller Installation

WARNING: Do not install the propeller until the aircraft has been completely assembled, all the systems have been checked thoroughly and you are located at a suitable flying site.

WARNING: Never install a cracked, nicked or otherwise damaged propeller.

NOTICE: If the propeller is not balanced, the aircraft may vibrate, causing the stabilization system to not operate correctly and/or decrease the life of the servos.

1. Loosely install two M2.5 x 10mm countersunk machine screws into the propeller adapter.
2. Install the propeller adapter onto the motor shaft with the smaller hub of the adapter facing forward.
3. Align the screws with the flat spots on the motor shaft, and tighten each screw using a 1.5mm hex wrench..
4. Place the propeller on the propeller adapter, and secure it by looping a propeller O-ring from one screw over the propeller and onto the other screw.

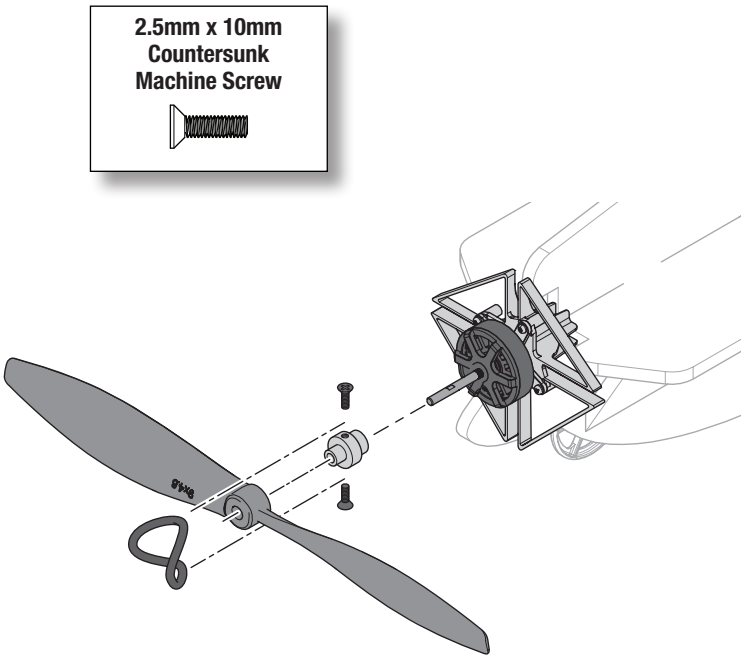

Control Surface Direction

Switch on the transmitter and connect the battery. Use the transmitter to operate the aileron, elevator, and rudder controls. View the aircraft from the rear when checking the control directions.

Ailerons

1. Move the aileron stick to the left. The left aileron should move up and the right aileron down, which will cause the aircraft to bank left.
2. Move the aileron stick to the right. The right aileron should move up and the left aileron down, which will cause the aircraft to bank right.

Elevators

3. Pull the elevator stick back. The elevator should move up, which will cause the aircraft to pitch up.
4. Push the elevator stick forward. The elevator should move down, which will cause the aircraft to pitch down.

Rudder

5. Move the rudder stick to the left. The rudder should move to the left, which will cause the aircraft to yaw left.
6. Move the rudder stick to the right. The rudder should move to the right, which will cause the aircraft to yaw right.

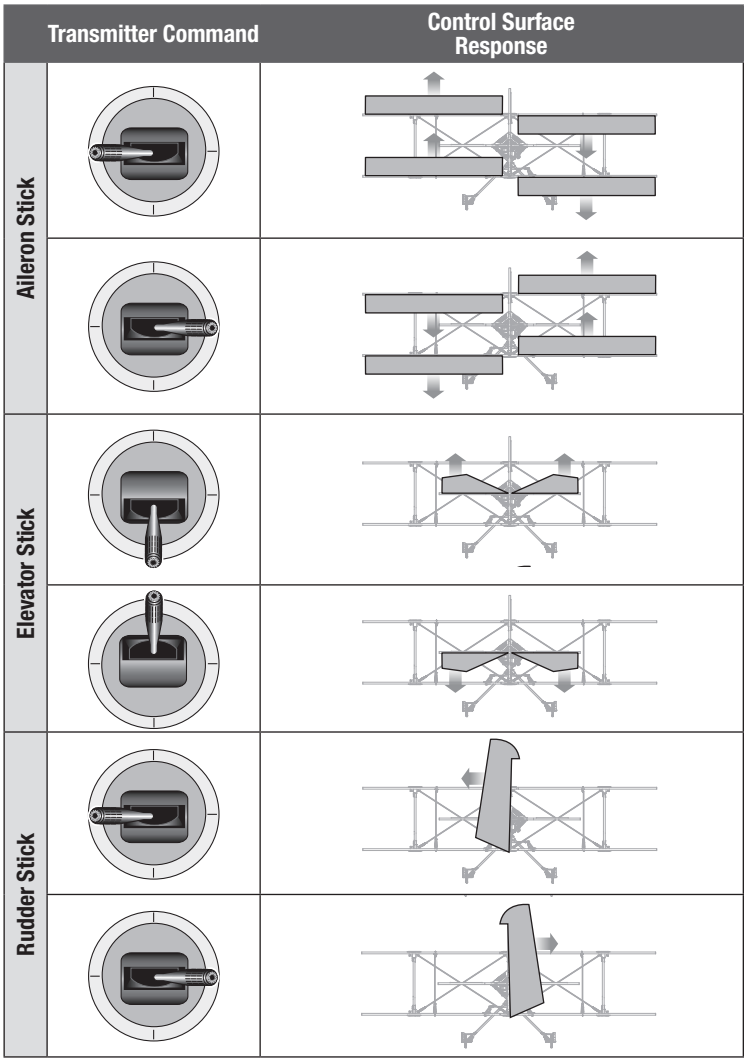

AS3X+® Control Response Test

WARNING: Do not perform any testing or maintenance with the propeller installed on the aircraft. Serious injury or property damage could result from the motor starting inadvertently.

This test ensures that the AS3X+ control system is functioning properly. Assemble the aircraft and bind your transmitter to the receiver before performing this test.

1. Raise the throttle just above 25%, then lower the throttle to activate AS3X+ technology.

WARNING: Keep all body parts, hair and loose clothing away from spinning motor, as these items could become entangled.

2. Move the entire aircraft as shown and ensure the control surfaces move in the direction indicated in the graphic. If the control surfaces do not respond as shown, do not fly the aircraft. Refer to the receiver manual for more information.

Once the AS3X+ system is active, control surfaces may move rapidly. This is normal. AS3X+ remains active until the battery is disconnected.

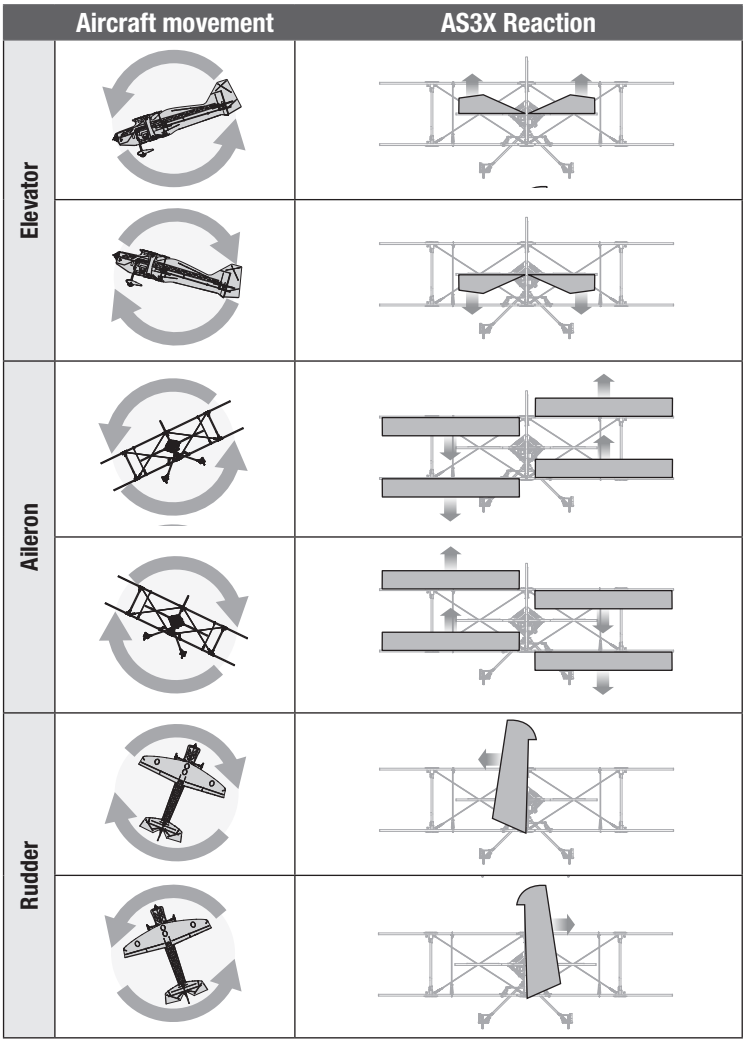

Center of Gravity (CG)

The CG location is measured from the leading edge of the wing at the root. The recommended CG range is 80-91mm back from the leading edge. We recommend starting 87mm behind the leading edge. Check the CG with the aircraft upright.

NOTICE: Install the battery but do not arm the ESC while checking the CG. Personal injury may result.

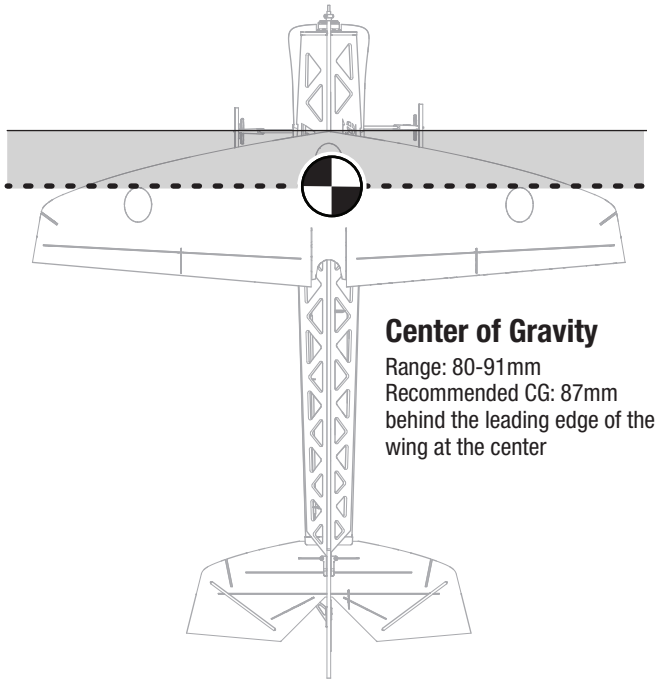

In Flight Trimming *BNF*

During your first flight, trim the aircraft for level flight at 3/4 throttle. Make small trim adjustments with your transmitter's trim switches to straighten the aircraft's flight path.

After adjusting the trim, do not touch the control sticks for 3 seconds. This allows the receiver to learn the correct settings to optimize AS3X+ performance.

Failure to do so could affect flight performance.

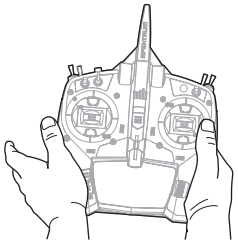

3 Seconds

Post Flight

1. Disconnect the flight battery from the ESC (required for safety and battery life).	5. Repair or replace all damaged parts.
2. Power OFF the transmitter.	6. Store the flight battery apart from the aircraft and monitor the battery charge.
3. Remove the flight battery from the aircraft.	7. Make note of the flight conditions and flight plan results, planning for future flights.
4. Recharge the flight battery.	

Motor Service

CAUTION: Always disconnect the flight battery before performing motor service.

Disassembly

1. Remove the propeller retaining O-ring.
2. Loosen the two M2.5 x 10mm screws in the propeller adapter, and remove the propeller adapter.
3. Remove the four M2 x 8mm screws and the motor with X-mount from the fuselage.
4. Disconnect the motor wires from the ESC wires.

Assembly

- Assemble in reverse order.
- Correctly align and connect the motor wire colors with the ESC wires.
- Install the propeller with the lettering facing out from the motor.

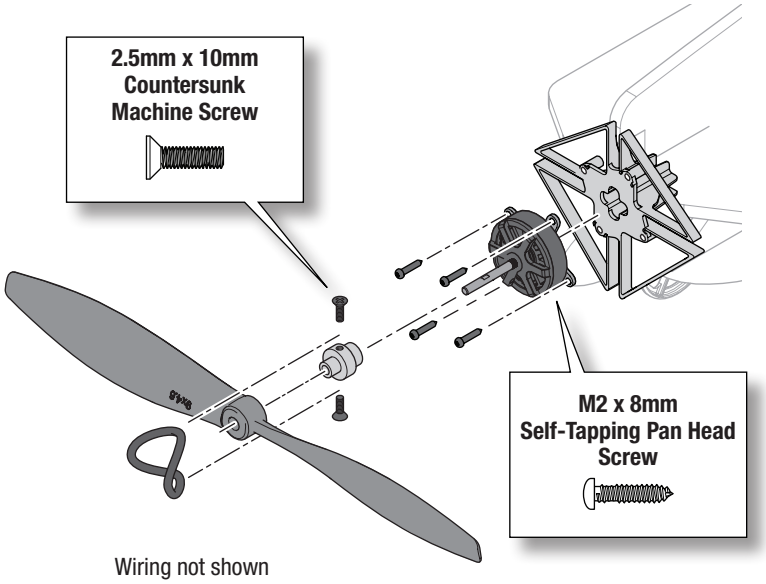

Troubleshooting Guide AS3X+ *BNF*

Problem	Possible Cause	Solution
Oscillation	Damaged propeller	Replace propeller
	Imbalanced propeller	Balance the propeller
	Motor vibration	Replace parts or correctly align all parts and tighten fasteners as needed
	Loose receiver	Align and secure receiver in fuselage
	Loose aircraft controls	Tighten or otherwise secure parts (servo, arm, linkage, horn and control surface)
	Worn parts	Replace worn parts (especially propeller or servo)
	Irregular servo movement	Replace servo
Inconsistent flight performance	Trim is not at neutral	If you adjust trim more than 8 clicks, adjust the clevis to remove trim
	Sub-Trim is not at neutral	No Sub-Trim is allowed. Adjust the servo linkage
	Aircraft was not kept immobile for 5 seconds after battery connection	With the throttle stick in lowest position. Disconnect battery, then reconnect battery and keep the aircraft still for 5 seconds
Incorrect response to the AS3X+ Control Response Test	Incorrect direction settings in the receiver, which can cause a crash	DO NOT fly. Correct the direction settings (refer to the receiver manual), then fly

Troubleshooting Guide

Problem	Possible Cause	Solution
Aircraft will not respond to throttle but responds to other controls	Throttle not at idle and/or throttle trim too high	Reset controls with throttle stick and throttle trim at lowest setting
	Throttle servo travel is lower than 100%	Make sure throttle servo travel is 100% or greater
	Throttle channel is reversed	Reverse throttle channel on transmitter
	Motor disconnected from ESC	Make sure motor is connected to the ESC
Extra propeller noise or extra vibration	Damaged propeller and O-ring retainer or motor	Replace damaged parts
	Propeller is out of balance	Balance or replace propeller
Reduced flight time or aircraft underpowered	Flight battery charge is low	Completely recharge flight battery
	Propeller installed backwards	Install propeller with numbers facing forward
	Flight battery damaged	Replace flight battery and follow flight battery instructions
	Flight conditions may be too cold	Make sure battery is warm before use
	Battery capacity too low for flight conditions	Replace battery or use a larger capacity battery
Aircraft will not Bind (during binding) to transmitter	Transmitter too near aircraft during binding process	Move powered transmitter a few feet from aircraft, disconnect and reconnect flight battery to aircraft
	Aircraft or transmitter is too close to large metal object, wireless source or another transmitter	Move aircraft and transmitter to another location and attempt binding again
	The bind plug is not installed correctly in the bind port	Install bind plug in bind port and bind the aircraft to the transmitter
	Flight battery/transmitter battery charge is too low	Replace/recharge batteries
	Bind switch or button not held long enough during the bind process	Power off transmitter and repeat bind process. Hold transmitter bind button or switch until receiver is bound
Aircraft will not connect (after binding) to transmitter	Transmitter too near aircraft during connecting process	Move powered transmitter a few feet from aircraft, disconnect and reconnect flight battery to aircraft
	Aircraft or transmitter is too close to large metal object, wireless source or another transmitter	Move aircraft and transmitter to another location and attempt connecting again
	Bind plug left installed in bind port	Rebind transmitter to the aircraft and remove the bind plug before cycling power
	Aircraft bound to different model memory (ModelMatch™ radios only)	Select correct model memory on transmitter
	Flight battery/Transmitter battery charge is too low	Replace/recharge batteries
	Transmitter may have been bound to a different aircraft using different DSM protocol	Bind aircraft to transmitter
Control surface does not move	Control surface, control horn, linkage or servo damage	Replace or repair damaged parts and adjust controls
	Wire damaged or connections loose	Do a check of wires and connections, connect or replace as needed
	Transmitter is not bound correctly or the incorrect airplanes was selected	Re-bind or select correct airplanes in transmitter
	Flight battery charge is low	Fully recharge flight battery
	BEC (Battery Elimination Circuit) of the ESC is damaged	Replace ESC
Controls reversed	Transmitter settings are reversed	Perform the Control Direction Test and adjust the controls on transmitter appropriately
Motor power pulses then motor loses power	ESC uses default soft Low Voltage Cutoff (LVC)	Recharge flight battery or replace battery that is no longer performing
	Weather conditions might be too cold	Postpone flight until weather is warmer
	Battery is old, worn out, or damaged	Replace battery
	Battery C rating might be too low	Use recommended battery

Replacement Parts

Part #	Description
EFL02951	Fuselage: 4-Site Flat Foamy 800mm
EFL02952	Top and Bottom Wing Set: 4-Site Flat Foamy 800mm
EFL02953	Horizontal Stabilizer: 4-Site Flat Foamy 800mm
EFL02954	Interplane Strut Set: 4-Site Flat Foamy 800mm
EFL02955	Landing Gear Set: 4-Site Flat Foamy 800mm
EFL02956	Wheel Pant Set: 4-Site Flat Foamy 800mm
EFL02957	Screw Set: 4-Site Flat Foamy 800mm
EFL02958	Pushrod/Flying wire Set: 4-Site Flat Foamy 800mm
EFL02959	Aileron, Elevator, Rudder Servo Arms: 4-Site Flat Foamy 800mm
EFL01982	Control Horn Set: Eratix/4-Site Flat Foamy
EFL01986	Propeller O-Rings (4): Eratix/4-Site Flat Foamy
EFL01987	Propeller Adapter: Eratix/4-Site Flat Foamy
EFL01988	9 x 4.6E Electric Propeller
SPM-1030	AR630+ 6-Channel Receiver with AS3X+ and SAFE
SPMXAE30E	Avian 30A Smart Lite Brushless ESC 2S-4S: IC2
SPMSA347	A347 9g Sub-Micro Digital Metal Gear (Aileron, Elevator, Rudder)
SPMXAM3400	2408-1300Kv Brushless Outrunner, 14-Pole

Recommended Items

Part #	Description
SPMR7110	NX7e+ 7-Channel DSMX Transmitter Only
SPMXC2050	S155 Smart Charger, 1x 55W
SPMX8503S30	850mAh 3S 11.1V Smart G2 30C IC2
SPMXCA320	Adapter: IC3 Battery / IC2 Device

Optional Items

Part #	Description
SPMXCA323	Adapter: JST-RCY Battery / IC2 Device
SPMX8003SJ50	800mAh 3S 11.1V LiPo 50C JST Non Smart
APCLP09046SF	9 x 4.6 Slow Flyer 3D Indoor Propeller
ONXT1000	Ultimate Air/Surface Startup Tool Set
SPMR8200	NX8 8-Channel DSMX Transmitter
SPMXC2020	Smart S1200 G2 AC Charger, 1 x 200W
SPMXC2080	Smart S1100 G2 AC Charger, 1 x 100W
SPMXCA400	Smart Lipo Bag, 14 x 6.5 x 8 cm
SPMXPSA100	Smart Powerstage Air Bundle: 850mAh 3S G2 LiPo Battery / S120 Charger

Important Federal Aviation Administration (FAA) Information

Use the QR code below to learn more about the Recreational UAS Safety Test (TRUST), as was introduced by the 2018 FAA Reauthorization Bill. This free test is required by the FAA for all recreational flyers in the United States. The completed certificate must be presented upon request by any FAA or law enforcement official.

Recreational UAS Safety Test

If your model aircraft weighs more than .55lbs or 250 grams, you are required by the FAA to register as a recreational flyer and apply your registration number to the outside of your aircraft. To learn more about registering with the FAA, use the QR code below.

FAA DroneZone

AMA National Model Aircraft Safety Code

Effective January 1, 2018

A model aircraft is a non-human-carrying device capable of sustained flight within visual line of sight of the pilot or spotter(s). It may not exceed limitations of this code and is intended exclusively for sport, recreation, education and/or competition. All model flights must be conducted in accordance with this safety code and related AMA guidelines, any additional rules specific to the flying site, as well as all applicable laws and regulations.

As an AMA member I agree:

- I will not fly a model aircraft in a careless or reckless manner.
- I will not interfere with and will yield the right of way to all human-carrying aircraft using AMA's See and Avoid Guidance and a spotter when appropriate.
- I will not operate any model aircraft while I am under the influence of alcohol or any drug that could adversely affect my ability to safely control the model.
- I will avoid flying directly over unprotected people, moving vehicles, and occupied structures.
- I will fly Free Flight (FF) and Control Line (CL) models in compliance with AMA's safety programming.
- I will maintain visual contact of an RC model aircraft without enhancement other than corrective lenses prescribed to me. When using an advanced flight system, such as an autopilot, or flying First-Person View (FPV), I will comply with AMA's Advanced Flight System programming.
- I will only fly models weighing more than 55 pounds, including fuel, if certified through AMA's Large Model Airplane Program.
- I will only fly a turbine-powered model aircraft in compliance with AMA's Gas Turbine Program.
- I will not fly a powered model outdoors closer than 25 feet to any individual, except for myself or my helper(s) located at the flightline, unless I am taking off and landing, or as otherwise provided in AMA's Competition Regulation.
- I will use an established safety line to separate all model aircraft operations from spectators and bystanders.

Limited Warranty

What this Warranty Covers

Horizon Hobby, LLC, (Horizon) warrants to the original purchaser that the product purchased (the "Product") will be free from defects in materials and workmanship at the date of purchase.

What is Not Covered

This warranty is not transferable and does not cover (i) cosmetic damage, (ii) damage due to acts of God, accident, misuse, abuse, negligence, commercial use, or due to improper use, installation, operation or maintenance, (iii) modification of or to any part of the Product, (iv) attempted service by anyone other than a Horizon Hobby authorized service center, (v) Product not purchased from an authorized Horizon dealer, or (vi) Product not compliant with applicable technical regulations, or (vii) use that violates any applicable laws, rules, or regulations.

OTHER THAN THE EXPRESS WARRANTY ABOVE, HORIZON MAKES NO OTHER WARRANTY OR REPRESENTATION, AND HEREBY DISCLAIMS ANY AND ALL IMPLIED WARRANTIES, INCLUDING, WITHOUT LIMITATION, THE IMPLIED WARRANTIES OF NON-INFRINGEMENT, MERCHANTABILITY AND FITNESS FOR A PARTICULAR PURPOSE. THE PURCHASER ACKNOWLEDGES THAT THEY ALONE HAVE DETERMINED THAT THE PRODUCT WILL SUITABLY MEET THE REQUIREMENTS OF THE PURCHASER'S INTENDED USE.

Purchaser's Remedy

Horizon's sole obligation and purchaser's sole and exclusive remedy shall be that Horizon will, at its option, either (i) service, or (ii) replace, any Product determined by Horizon to be defective. Horizon reserves the right to inspect any and all Product(s) involved in a warranty claim. Service or replacement decisions are at the sole discretion of Horizon. Proof of purchase is required for all warranty claims. SERVICE OR REPLACEMENT AS PROVIDED UNDER THIS WARRANTY IS THE PURCHASER'S SOLE AND EXCLUSIVE REMEDY.

Limitation of Liability

HORIZON SHALL NOT BE LIABLE FOR SPECIAL, INDIRECT, INCIDENTAL OR CONSEQUENTIAL DAMAGES, LOSS OF PROFITS OR PRODUCTION OR COMMERCIAL LOSS IN ANY WAY, REGARDLESS OF WHETHER SUCH CLAIM IS BASED IN CONTRACT, WARRANTY, TORT, NEGLIGENCE, STRICT LIABILITY OR ANY OTHER THEORY OF LIABILITY, EVEN IF HORIZON HAS BEEN ADVISED OF THE POSSIBILITY OF SUCH DAMAGES. Further, in no event shall the liability of Horizon exceed the individual price of the Product on which liability is asserted. As Horizon has no control over use, setup, final assembly, modification or misuse, no liability shall be assumed nor accepted for any resulting damage or injury. By the act of use, setup or assembly, the user accepts all resulting liability. If you as the purchaser or user are not prepared to accept the liability associated with the use of the Product, purchaser is advised to return the Product immediately in new and unused condition to the place of purchase.

Law

These terms are governed by Illinois law (without regard to conflict of law principals). This warranty gives you specific legal rights, and you may also have other rights which vary from state to state. Horizon reserves the right to change or modify this warranty at any time without notice.

WARRANTY SERVICES

Questions, Assistance, and Services

Your local hobby store and/or place of purchase cannot provide warranty support or service. Once assembly, setup or use of the Product has been started, you must contact your local distributor or Horizon directly. This will enable Horizon to better answer your questions and service you in the event that you may need any assistance.

For questions or assistance, please visit our website at www.horizonhobby.com, submit a Product Support Inquiry, or call the toll free telephone number referenced in the Warranty and Service Contact Information section to speak with a Product Support representative.

Inspection or Services

If this Product needs to be inspected or serviced and is compliant in the country you live and use the Product in, please use the Horizon Online Service Request submission process found on our website or call Horizon to obtain a Return Merchandise Authorization (RMA) number. Pack the Product securely using a shipping carton. Please note that original boxes may be included, but are not designed to withstand the rigors of shipping without additional protection. Ship via a carrier that provides tracking and insurance for lost or damaged parcels, as Horizon is not responsible for merchandise until it arrives and is accepted at our facility. An Online Service Request is available at http://www.horizonhobby.com/content/service-center_render-service-center. If you do not have internet access, please contact Horizon Product Support to obtain a RMA number along with instructions for submitting your product for service. When calling Horizon, you will be asked to provide your complete name, street address, email address and phone number where you can be reached during business hours. When sending product into Horizon, please include your RMA number, a list of the included items, and a brief summary of the problem. A copy of your original sales receipt must be included for warranty consideration. Be sure your name, address, and RMA number are clearly written on the outside of the shipping carton.

NOTICE: Do not ship LiPo batteries to Horizon. If you have any issue with a LiPo battery, please contact the appropriate Horizon Product Support office.

Warranty Requirements

For Warranty consideration, you must include your original sales receipt verifying the proof-of-purchase date. Provided warranty conditions have been met, your Product will be serviced or replaced free of charge. Service or replacement decisions are at the sole discretion of Horizon.

Non-Warranty Service

Should your service not be covered by warranty, service will be completed and payment will be required without notification or estimate of the expense unless the expense exceeds 50% of the retail purchase cost. By submitting the item for service you are agreeing to payment of the service without notification. Service estimates are available upon request. You must include this request with your item submitted for service. Non-warranty service estimates will be billed a minimum of ½ hour of labor. In addition you will be billed for return freight. Horizon accepts money orders and cashier's checks, as well as Visa, MasterCard, American Express, and Discover cards. By submitting any item to Horizon for service, you are agreeing to Horizon's Terms and Conditions found on our website http://www.horizonhobby.com/content/service-center_render-service-center.

ATTENTION: Horizon service is limited to Product compliant in the country of use and ownership. If received, a non-compliant Product will not be serviced. Further, the sender will be responsible for arranging return shipment of the un-serviced Product, through a carrier of the sender's choice and at the sender's expense. Horizon will hold non-compliant Product for a period of 60 days from notification, after which it will be discarded.

10/15

Contact Information

Country of Purchase	Horizon Hobby	Contact Information	Address
United States of America	Horizon Service Center (Repairs and Repair Requests)	servicecenter.horizonhobby.com/RequestForm/	2904 Research Rd Champaign, Illinois, 61822 USA
	Horizon Product Support (Product Technical Assistance)	productsupport@horizonhobby.com 877-504-0233	
	Sales	websales@horizonhobby.com 800-338-4639	
European Union	Horizon Technischer Service Sales: Horizon Hobby GmbH	service@horizonhobby.de +49 (0) 4121 2655 100	Hanskampring 9 D 22885 Barsbüttel, Germany

FCC Information

FCC ID: BRWSPMAR630

Supplier's Declaration of Conformity

4-Site Flat Foamie (EFL02950/EFL02975):

This device complies with part 15 of the FCC Rules. Operation is subject to the following two conditions: (1) This device may not cause harmful interference, and (2) this device must accept any interference received, including interference that may cause undesired operation.

CAUTION: Changes or modifications not expressly approved by the party responsible for compliance could void the user's authority to operate the equipment.

NOTE: This equipment has been tested and found to comply with the limits for a Class B digital device, pursuant to part 15 of the FCC Rules. These limits are designed to provide reasonable protection against harmful interference in a residential installation. This equipment generates, uses and can radiate radio frequency energy and, if not installed and used in accordance with the instructions, may cause harmful interference to radio communications. However, there is no guarantee that interference will not occur in a particular installation. If this equipment does cause harmful interference to radio or television reception, which can be determined by turning the equipment off and on, the user is encouraged to try to correct the interference by one or more of the following measures:

- Reorient or relocate the receiving antenna.
- Increase the separation between the equipment and receiver.
- Connect the equipment into an outlet on a circuit different from that to which the receiver is connected.
- Consult the dealer or an experienced radio/TV technician for help.

Horizon Hobby, LLC
2904 Research Rd.,
Champaign, IL 61822
Email: compliance@horizonhobby.com
Web: HorizonHobby.com

IC Information

IC: 6157A-SPMAR630
CAN ICES-3 (B)/NMB-3(B)

This device contains license-exempt transmitter(s)/receivers(s) that comply with Innovation, Science, and Economic Development Canada's license-exempt RSS(s). Operation is subject to the following 2 conditions:

1. This device may not cause interference.
2. This device must accept any interference, including interference that may cause undesired operation of the device.

Compliance Information for the European Union

EU Compliance Statement:

4-Site Flat Foamie BNF Basic (EFL02950): Hereby, Horizon Hobby, LLC declares that the device is in compliance with the following: EU Radio Equipment Directive 2014/53/EU; RoHS 2 Directive 2011/65/EU; RoHS 3 Directive - Amending 2011/65/EU Annex II 2015/863.

4-Site Flat Foamie PNP (EFL02975): Hereby, Horizon Hobby, LLC declares that the device is in compliance with the following: EU EMC Directive 2014/30/EU; RoHS 2 Directive 2011/65/EU; RoHS 3 Directive - Amending 2011/65/EU Annex II 2015/863.

The full text of the EU declaration of conformity is available at the following internet address: https://www.horizonhobby.com/content/support-render-compliance.

NOTE: This product contains batteries that are covered under the 2006/66/EC European Directive, which cannot be disposed of with normal household waste. Please follow local regulations.

Wireless Frequency Range and Wireless Output Power:
Receiver:
2402 - 2478MHz / 4.65dBm

E328

EU Manufacturer of Record:
Horizon Hobby, LLC
2904 Research Road
Champaign, IL 61822 USA

EU Importer of Record:
Horizon Hobby, GmbH
Hanskampring 9
22885 Barsbüttel Germany

WEEE NOTICE:

This appliance is labeled in accordance with European Directive 2012/19/EU concerning waste of electrical and electronic equipment (WEEE). This label indicates that this product should not be disposed of with household waste. It should be deposited at an appropriate facility to enable recovery and recycling.

© 2024 Horizon Hobby, LLC.
E-flite, Avian, DSM, DSM2, DSMX, Bind-N-Fly, BNF, the BNF logo, Plug-N-Play, AS3X+, SAFE, the SAFE logo, ModelMatch, IC2, IC3, and the Horizon Hobby logo are trademarks or registered trademarks of Horizon Hobby, LLC.
The Spektrum trademark is used with permission of Bachmann Industries, Inc.
All other trademarks, service marks and logos are property of their respective owners.
US 8,672,726. US 9,056,667. US 9,753,457. US 9,930,567. US 10,078,329. US 10,419,970. US 10,849,013. Other patents pending.
https://www.horizonhobby.com/content/e-flite-rc