G500T

Tail Lock/Rate Ring Gyro Instructions

For Helicopter Use
JRPG500T

FEATURES

- Compact integrated design for easy installation/connection
- No moving parts for a nearly unlimited service life
- New Silicone Ring Sensor for drift free operation and outstanding holding power
- Tail Lock™ and Rate modes
- Remote dual gain control
- Servo travel limiter for easy setup
- High/Standard Frame Rate selection
- Silver/chrome finish to isolate RF & dissipate heat
- Compatible with JR and other brand radio systems

SPECIFICATIONS

Operating Voltage:	4.8V only
Operating Current:	95mAh
Dimensions:	24.5H x 30.5W x 30.5L
Weight:	28 g
Gyro Gain:	Dual remote adjustable
Tail Lock/Rate Modes:	Remote/Selectable
Servo Travel Limiter:	Manual pot

INTRODUCTION

JR's latest gyro, the G500T, utilizes a new state-of the-art Silicone Ring Sensor for outstanding holding power and drift free operation.

The G500T's compact one piece design provides easy installation in a wide variety of models.

It is important to note that the operational features of the G500T are very different than that of other gyro systems. Many current settings, including the travel volume, exponential, dual rates, and tail rotor revolution mixing values (Rate model only) must all be changed from their previous normal settings in order to achieve the desired tail rotor/response and maximum performance that the G500T has to offer.

JR's new G500T features remotely selectable Rate and Tail Lock™ mode options. Tail Lock mode is highly recommended for use in helicopters as it will hold the tail of the model in position without the need for Revolution mixing.

Note: The G500T should not be used in airplanes while in the Tail Lock mode.

Carefully read these instructions so you will fully understand and become comfortable with the functions and operating characteristics of the G500T prior to installation and initial test flights.

INSTALLATION & HOOKUP

Refer to the following diagrams for proper positioning of your G500T gyro.

The G500T should be mounted in the designated area as specified by your Heli's instruction manual.

Many helicopters provide mounting bases near the main shaft. Use them only if they are positioned away from heat-generating sources. If it is not possible to locate the sensor near the main shaft, an alternate location to consider is on the front radio bed/tray.

Mount the G500T with the label facing upward as shown in the diagram.

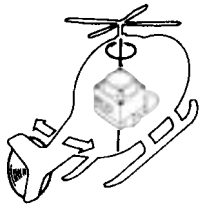

CONTROL BALL PLACEMENT

Rudder Servo Linkage Position

Remove unused servo horn arms to prevent obstruction. For best performance, attach the tail control rod ball to the servo arm at a distance of approximately 16–18mm from the center mounting screw of the servo arm. The performance of the G500T will be greatly reduced if the control linkage is attached at a distance of less than 16mm, as this position will not make full use of the G500T's sensing capabilities.

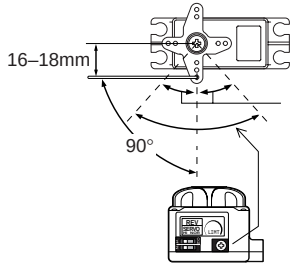

CONNECTIONS

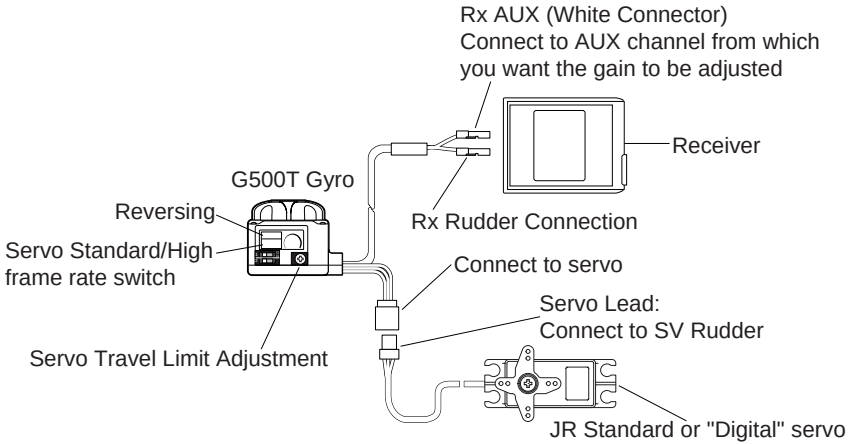

Radio Type Polarity Connections

JR	Futaba/HRC	Airtronics Z
red to red	red to red	red to red
brown to brown	brown to black	brown to black
orange to orange	orange to white	orange to white

Please note that if the system is connected incorrectly, the G500T will not function, but no damage will occur to any of the radio components. After successful connection, secure the gyro to the servo connection with a small piece of tape to prevent possible disconnection during use.

Servo Selection

A servo with quick transit times and accurate centering will allow the G500T gyro to perform to its full potential.

If servos with slow transit times are used (.15 sec. or higher), the G500T may become too quick for the servo, resulting in a "wag" or "hunting" situation which requires the user to reduce the percentage of gain. This reduction in gain will also reduce the holding power and, therefore, the performance of the G500T.

SETUP & ADJUSTMENT

Connecting the JR G500T Gyro to your radio systems is as easy as 1-2-3:

Step 1: Connect the Male plug lead to the desired channel of operation on the receiver (typically Rudder).

CHANNEL FUNCTION
- Heli
  - Rudd = Rudder/Tail Rotor
- Airplane
  - Rudd = Rudder
  - Aile = Aileron Control (airplane only)
  - Elev = Elevator Control (airplane only)

If the G500T is located away from the receiver, an optional servo extension (purchased separately) may be used.

Step 2: Connect the desired servo to be used into the Female connector lead.

Tip: It is suggested that you apply some scotch tape to the joint to prevent possible disconnection during flight.

Step 3: Insert the AUX connector (white) to the channel on the receiver from which you would like the gain control to be activated.

INITIAL TRANSMITTER SETTINGS

After some experience and flight time is gained, these values can be adjusted to suit your preference. Use these values as a starting point.

- Travel Adjust
  - Left Rudder 150%
  - Right Rudder 150%
- Dual Rates
  - Hover Mode/Low Rate 80%
  - Stunt Mode/High Rate 100%
- Exponential Values
  - Hover Mode/Low Rate 30% 20%
  - Stunt Mode/High Rate 40% 30%
- Gyro Gain Values
  - Hover Mode/High Rate 90% 75%
  - Stunt Mode/Low Rate 75% 0-65%
- Revolution Mixing
  - Hover Mode 5%L 5%R
  - (Rate Mode/Heli Only) Stunt Mode 5%L 5%R

Note: If it is necessary to reduce gain values below this level to stop hunting, move the servo arm ball in one hole towards the ceenter of the on the servo arm and re-test. Reducing the gain below these recommended settings can cause a reduction in gyro gain holding power and overall gyro performance.

SERVO TRAVEL - LIMITER POT

The G500T features a manual servo travel limiter located on the side of the gyro as shown in the diagram. This manual setting allows you to use a full 150% travel value in your radio setup for the best resolution, while being able to reduce the physical travel of the servo to remove any tail linkage binding.

The travel adjustment pot increases or decreases the travel of the servo in both directions equally.

To set the physical travel of the servo, move the servo via the transmitter stick to its extreme Left/Right positions while looking at the tail pitch control slider on the back of the model. If there is visible clearance at maximum travel in each direction, increase the servo travel with the limiter pot. If binding is occurring in one or both directions, reduce the travel limit pot as needed until binding is removed.

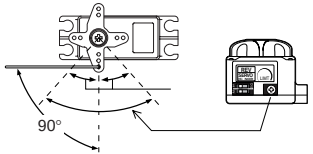

GYRO GAIN SELECTION

Remote Gyro Gain Access Options

JR PCM 10 Series Systems: Connect to Aux 3 Channel

If you are using a PCM-10, 10S, 10SX, 10SxII or 10X and would like to make use of the Code 44 gyro sensitivity adjustment feature, you will need to enter code 44 and activate this function. If code 44 is not activated, then the gain adjustment would be made through the servo travel adjust function for the Aux 3 channel.

JR XP8103 and X-378 Systems: Connect to Aux 2 Channel

If you are using any version if the JR XP8103 or X-378 and would like to make use of the gyro sensitivity adjustment feature, you will need to enter the function mode and activate the Gyro Sens function. If Gyro Sens is not activated, then the gain adjustment would be made through the servo travel adjust function for the Aux 2 channel.

JR XP662 Systems: Connect to Gear Channel

The the gain adjustment will be accessed through the servo travel adjust function for the Gear channel.

3-YEAR WARRANTY COVERAGE

Your new equipment is warranted to the original purchaser against manufacturer defects in material and workmanship for 3 years from the date of purchase. During this period, Horizon Service Center will repair or replace, at our discretion, any component that is found to be factory defective at no cost to the purchaser. This warranty is limited to the original purchaser of the unit and is not transferable.

This warranty does not apply to any unit which has been improperly installed, mishandled, abused, or damaged in a crash, or to any unit which has been repaired or altered by any unauthorized agencies. Under no circumstances will the buyer be entitled to consequential or incidental damages.

This limited warranty gives you specific legal rights; you also have other rights which may vary from state to state.

As with all fine electronic equipment, do not subject your unit to extreme temperatures, humidity or moisture. Do not leave it in direct sunlight for long periods of time.

CONTROL ROD/ARM ADJUSTMENT

Following is the setup and adjustment procedure that must be followed to achieve the highest level of performance from your system.

Step 1: Set the G500T to the Rate Mode position as described above.

Step 2: Unhook the control linkage from your servo and swing the servo arm out of the way. Lightly grasp the pushrod at the servo end and run the linkage through its entire travel. The linkage should move through its entire range smoothly with very little friction and no rough spots. Work on the linkage system until this is achieved.

Step 3: On your transmitter, set all trimmers (sub-trim, trim offset, mechanical trim, etc.) to zero. For heli, set the throttle/pitch stick at exactly the hover position (standard hover position is 50%). Turn off or zero out both the revolution mixing up and down and the acceleration mixing.

Step 4: Turn on your receiver and allow the model to remain totally motionless for 3 seconds. This procedure is necessary to allow the G500T time to establish and record the center or neutral positions.

Step 5: Remove the servo arm and replace it so that it is exactly 90° to the tail rotor pushrod (see diagram). You may find that the spline in the servo output shaft are just offset enough on your servo arm so as to not allow 90° positioning. Rotate the servo arm to another arm and try again. Find the arm that is closest to 90° and secure it in place with the provided screw.

Trimming Neutral with Sub-Trim

When in tail lock mode, the servo arm may "creep" or move slightly. This movement is normal, and can be corrected by changing the sub trim value in your radio system for the rudder channel. Enter the sub-trim function of your system and add a left or right value for the rudder channel. Re-center the rudder servo with the control stick and re-test. Add/reduce sub trim as needed until the servo will remain motionless, and in the neutral position. A value of 6-8 is generally all that is required for this final trimming.

CONFIRMING GYRO/SERVO DIRECTION

Step 1: Be sure the rudder servo is moving in the proper direction. A right rudder command should move the nose to the right (if you're unsure, seek help from someone more experienced). Reverse the servo direction in the transmitter if necessary.

Step 2: Give a right rudder command and note the direction the rudder servo moves (clockwise or counter-clockwise). Now pick up the helicopter and quickly move the nose to the left. The servo should move in the same direction as a right rudder command. If it moves in the opposite direction, switch the small reverse switch located on the G500T gyro in the opposite direction.

Important: When the reversing switch on the gyro is changed, this will also reverse the direction of the tail servo. If the gyro reversing switch is changed, it will be necessary to reverse the direction of the servo using the transmitter's servo reversing function.

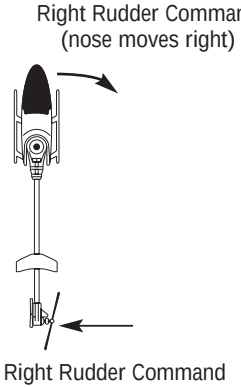

REPAIR SERVICE INSTRUCTIONS

Warranty Repair

To receive warranty service, you must include a legible photocopy of your original dated sales receipt to verify your proof-of-purchase date. Providing that warranty conditions have been met, your equipment will be repaired without charge.

Normal Non-Warranty Repairs

Should your repair cost exceed 50% of the retail purchase cost, you will be provided with an estimate advising you of your options.

Within your letter, advise us of the payment method you prefer to use. Horizon Service Center accepts VISA or MasterCard. Please include your card number and expiration date. Mail your system to:

Horizon Service Center
4105 Fieldstone Road
Champaign, Illinois 61822
(217) 355-9511
www.horizonhobby.com